2017 ATV ALTERRA 450 T3 GREEN

Contents

AIR INTAKE ASSEMBLY [96409] . . . 1
BATTERY AND STARTER ASSEMBLY [302351] . . . 3
CAM CHAIN ASSEMBLY [301451] . . . 4
CASE/BELT COOLING ASSEMBLY [301927] . . . 5
CLUTCH/V-BELT/MAGNETO COVER ASSEMBLY [301453] . . . 6
COOLING ASSEMBLY [302349] . . . 8
CRANK BALANCER ASSEMBLY [301454] . . . 10
CRANKCASE ASSEMBLY [300573] . . . 11
CRANKSHAFT AND PISTON ASSEMBLY [301452] . . . 13
CYLINDER ASSEMBLY [92762] . . . 14
CYLINDER HEAD AND CAMSHAFT/VALVE ASSEMBLY [300571] . . . 15
DRIVE TRAIN ASSEMBLY [301928] . . . 17
ENGINE AND EXHAUST [302348] . . . 18
FRAME AND RELATED PARTS [302343] . . . 20
FRONT BODY, RACK, AND HEADLIGHT ASSEMBLY [302340] . . . 22
FRONT DRIVE GEARCASE ASSEMBLY [301367] . . . 24
FRONT SUSPENSION ASSEMBLY [301924] . . . 26
GAS TANK ASSEMBLY [302347] . . . 28
GEAR SHIFTING ASSEMBLY [94326] . . . 30
HANDLEBAR ASSEMBLY [302344] . . . 32
HYDRAULIC BRAKE ASSEMBLY [302346] . . . 34
LICENSE PLATE HOLDER ASSEMBLY [302353] . . . 36
MAGNETO ASSEMBLY [301458] . . . 37
OIL PUMP AND STRAINER ASSEMBLY [301455] . . . 38
REAR BODY, RACK, AND TAILLIGHT ASSEMBLY [302342] . . . 40
REAR DRIVE GEARCASE ASSEMBLY [97672] . . . 42
REAR SUSPENSION ASSEMBLY [301925] . . . 44
SEAT ASSEMBLY [301363] . . . 46
SECONDARY DRIVE ASSEMBLY [94327] . . . 47
SECONDARY TRANSMISSION ASSEMBLY [301457] . . . 49
SHIFT LEVER ASSEMBLY [301366] . . . 51
STARTER CLUTCH ASSEMBLY [92888] . . . 52
STEERING ASSEMBLY [300613] . . . 53
THROTTLE BODY ASSEMBLY [302352] . . . 55
TRANSMISSION ASSEMBLY [301456] . . . 56
WATER PUMP ASSEMBLY [301459] . . . 57
WHEEL AND TIRE ASSEMBLY [302345] . . . 59
WINCH ASSEMBLY [300583] . . . 60
WIRING HARNESS ASSEMBLY [302350] . . . 61

AIR INTAKE ASSEMBLY [96409]

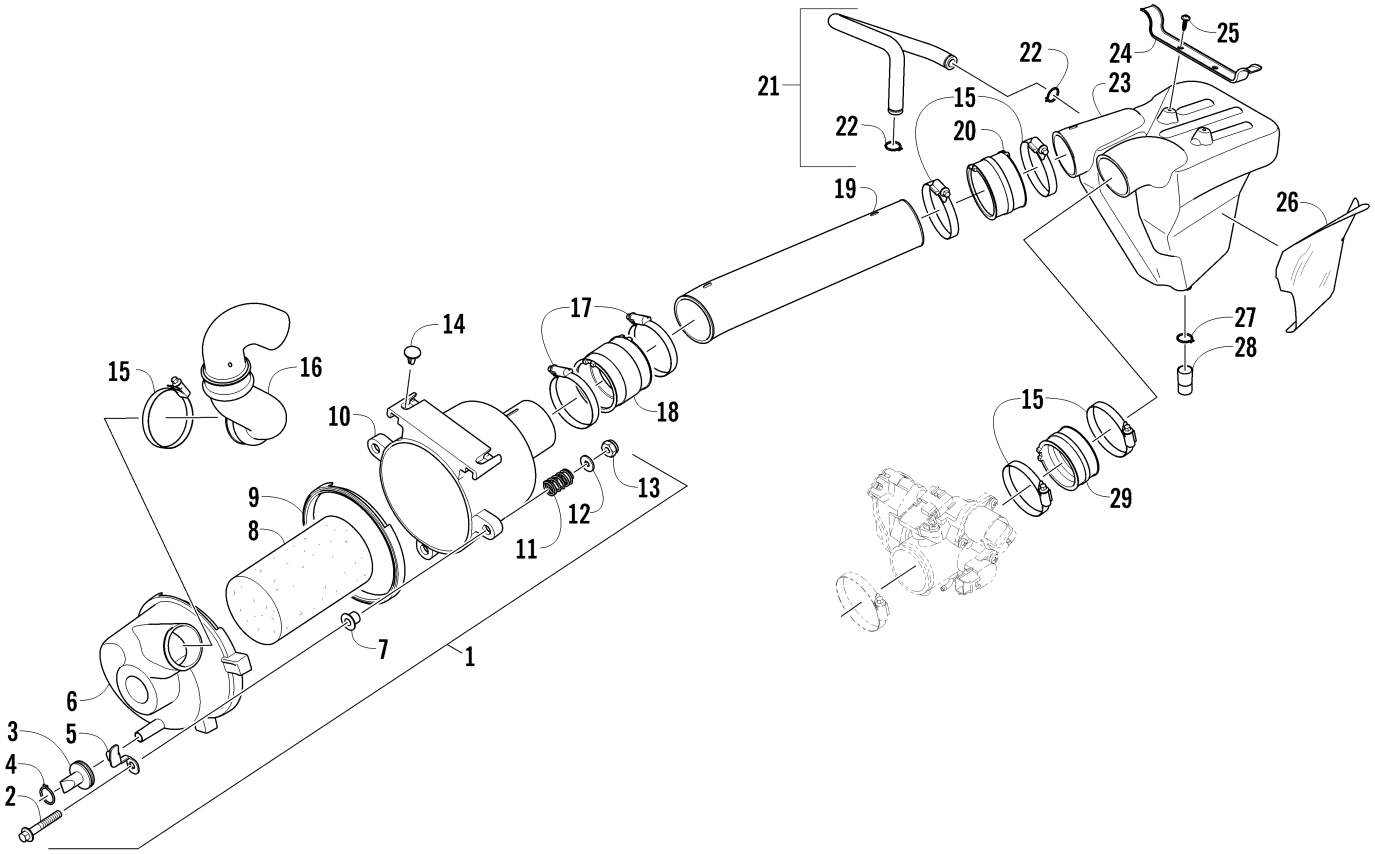

Item	Part No.	New Part	Qty	Name	Context	Footnote
1	3313-395		1	Filter, Air - Assembly	(inc. 2-13)	
2	8408-850		3	Screw, Cap		
3	0470-442		1	Valve, Drain		
4	3313-705		1	Clamp		
5	3313-375		3	Latch		
6	3313-376		1	Cover, Air Filter		
7	3313-853		3	Spacer		
8	3313-378		1	Element, Air Filter		
9	3313-446		1	Gasket, Air Filter		
10	3313-377		1	Housing, Air Filter		
11	0402-678		3	Spring, Shift Lever		
12	8050-222		3	Washer		
13	3303-269		3	Nut		
14	3305-448		2	Clip, Retaining		
15	0423-380		5	Clamp, Hose - Worm (50-70mm x 9mm) - Black		
16	3313-816		1	Boot, Air Intake		
17	3313-817		2	Clamp		
18	3313-275		1	Boot, Air Intake		
19	3313-063		1	Boot, Air Intake		
20	3313-274		1	Boot, Air Intake		

Item	Part No.	New Part	Qty	Name	Context	Footnote
21	3313-397		1	Hose, Oil Catch	(inc. 22)	
22	3304-167		2	Clamp		
23	3313-224		1	Housing, Air Intake		
24	3313-356		1	Bracket, Mounting - Air Intake Housing		
25	3304-409		2	Bolt Washer 5*12		
26	3313-362		1	Shield, Heat		
27	3313-706		1	Clamp		
28	3313-543		1	Pipe, Drain		
29	3306-309		1	Boot, Air Intake		

BATTERY AND STARTER ASSEMBLY [302351]

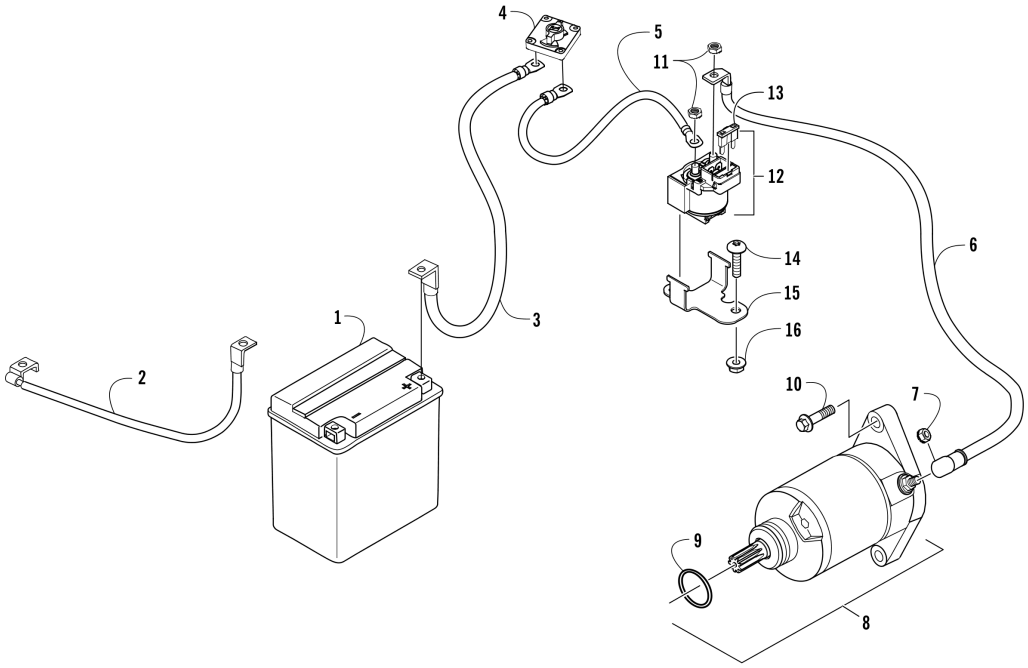

Item	Part No.	New Part	Qty	Name	Context	Footnote
1	3306-301		1	Battery Assembly		
2	3307-192		1	Cable, Battery/Ground		
3	3307-861		1	Cable, Battery/Switch		
4	3307-849		1	Switch, Battery - Disconnect		
5	3307-862		1	Cable, Switch/Solenoid		
6	3307-129		1	Cable, Solenoid/Starter		
7	3304-011		1	Nut w/Washer		
8	3305-954		1	Motor, Starter - Assembly	(inc. 9)	
9	3304-104		1	O-Ring		
10	3305-946		2	Screw, Cap		
11	3304-654		2	Nut, Lock		
12	3313-464		1	Solenoid	(inc. 13)	
13	3304-212		1	Fuse - 30 Amp		
14	3305-703		2	Screw, Machine		
15	3307-859		1	Bracket, Mounting - Solenoid		
16	3304-431		2	Nut, Lock		

CAM CHAIN ASSEMBLY [301451]

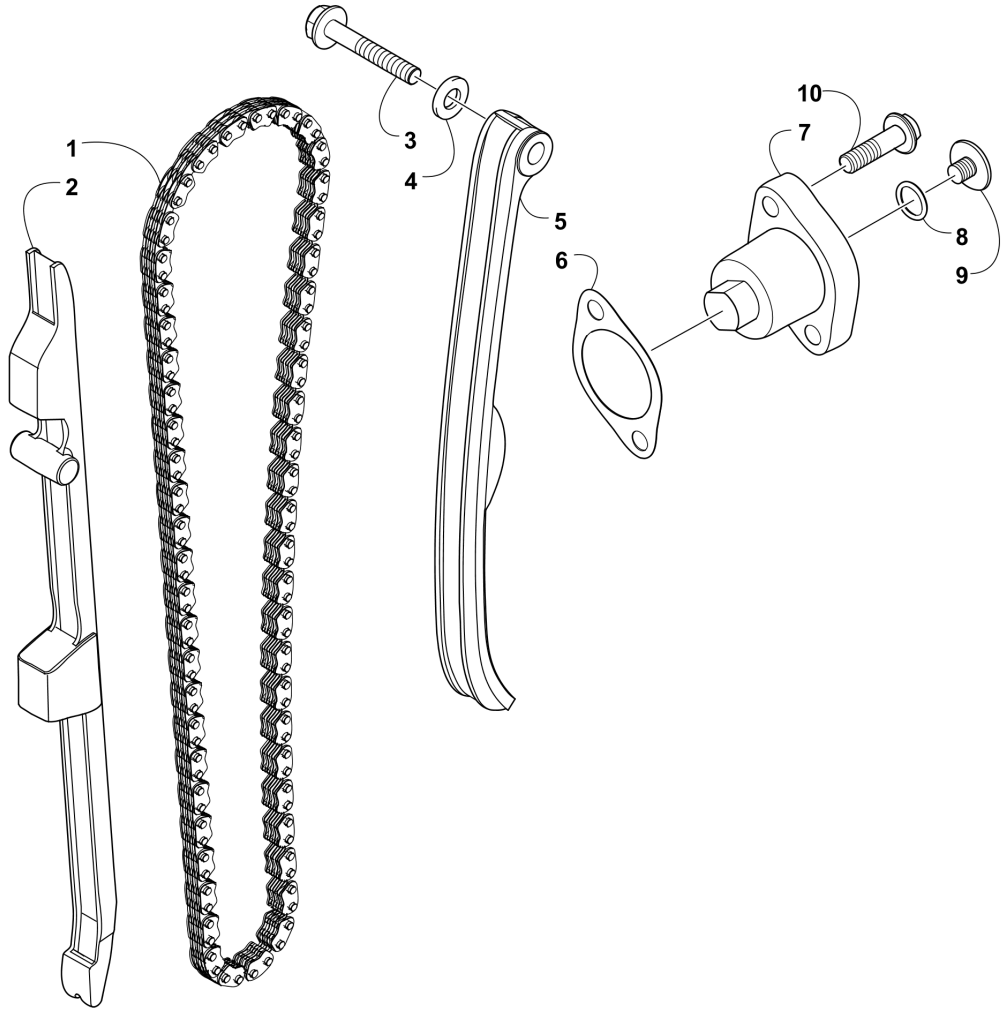

Item	Part No.	New Part	Qty	Name	Context	Footnote
1	0810-005		1	Chain, Cam		
2	0810-068		1	Guide, Chain		
3	0826-133		1	Pivot, Tensioner		
4	0830-150		1	Washer		
5	0810-007		1	Tensioner, Chain		
6	3303-035		1	Gasket		
7	3307-102		1	Adjuster, Tensioner - Assembly		
8	3304-100		1	O-Ring		
9	3307-125		1	Screw, Adjuster		
10	3304-569		2	Screw, Cap		

CASE/BELT COOLING ASSEMBLY [301927]

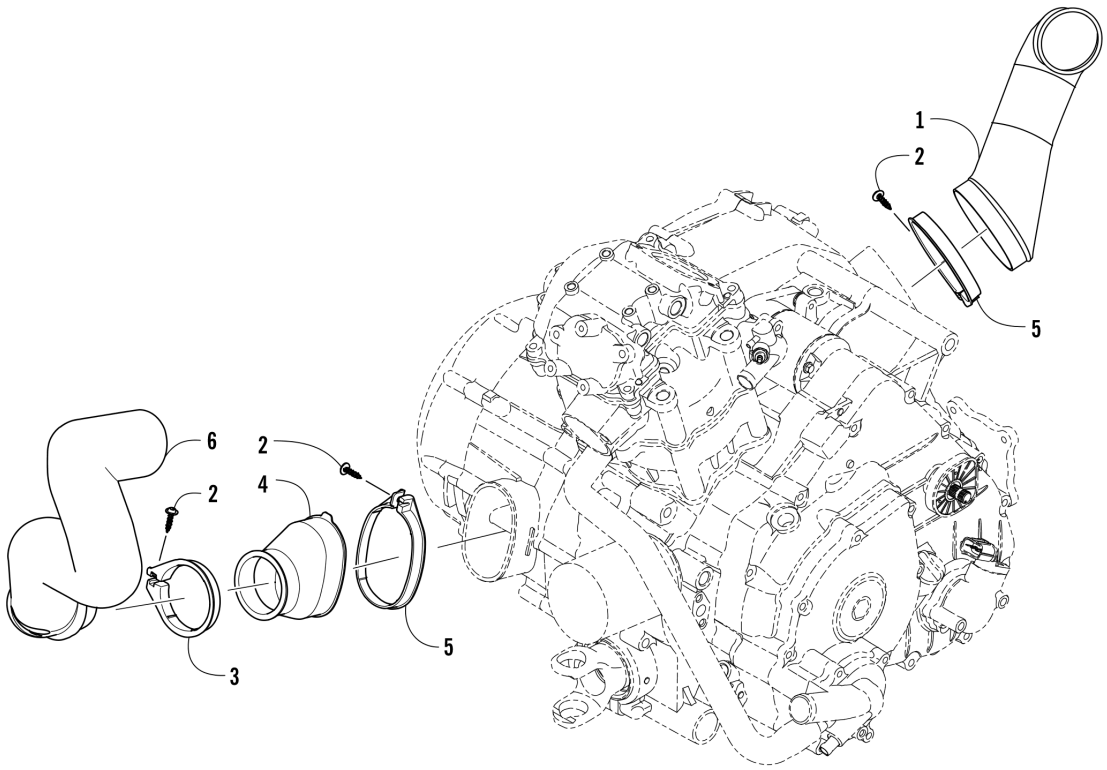

Item	Part No.	New Part	Qty	Name	Context	Footnote
1	3306-532		1	Duct, Air Out		
2	0423-342		3	Screw, Self-Tapping		
3	0423-551		1	Clamp		
4	3313-782		1	Boot, Duct		
5	0423-550		2	Clamp		
6	3313-065		1	Duct, Belt - Air In		

CLUTCH/V-BELT/MAGNETO COVER ASSEMBLY [301453]

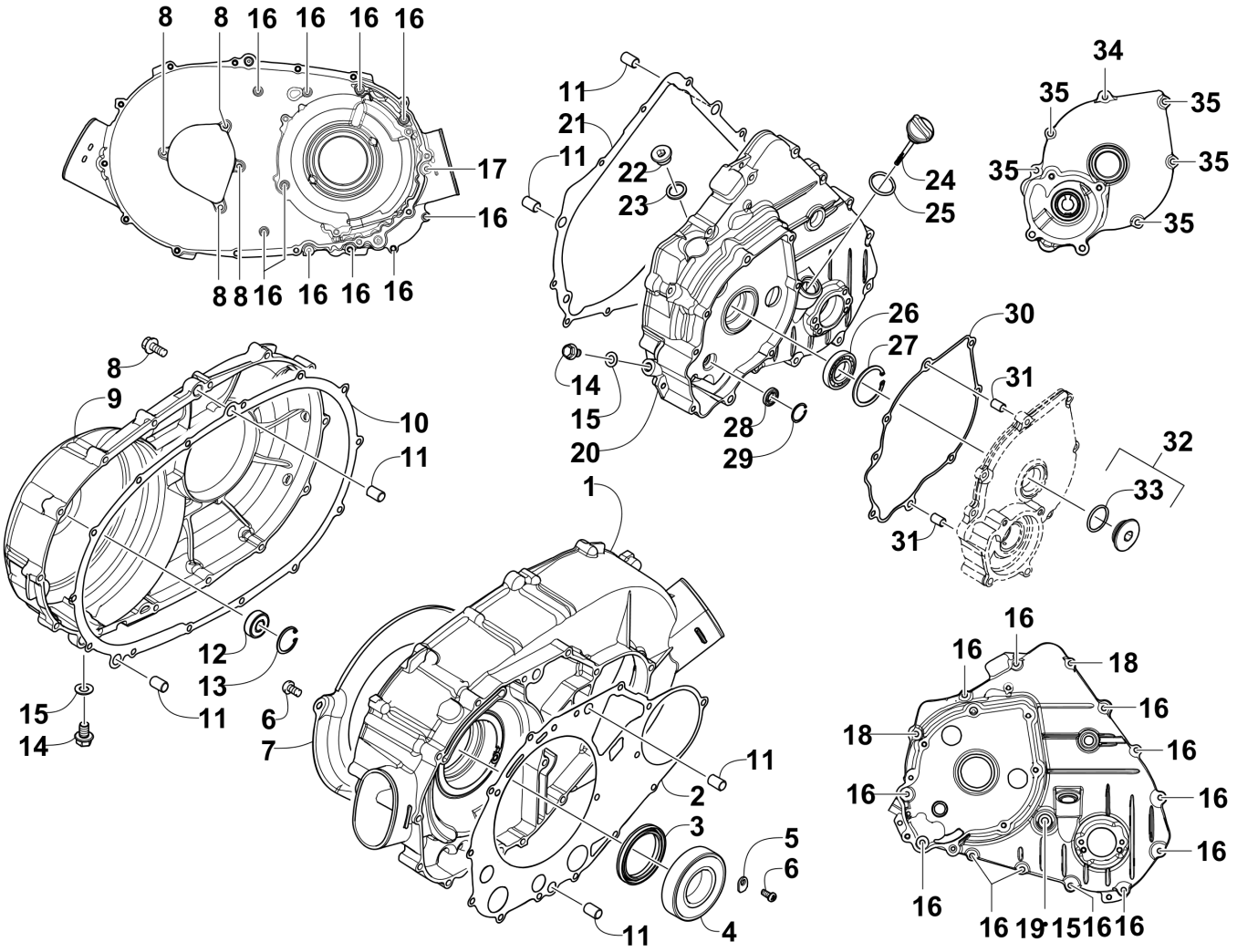

Item	Part No.	New Part	Qty	Name	Context	Footnote
1	0806-026		1	Cover, Clutch		
2	0830-055		1	Gasket		
3	0830-157		1	Seal		
4	0832-071		1	Bearing		
5	0822-104		2	Retainer, Bearing		
6	0826-144		5	Screw, Machine		
7	0806-103		1	Plate, Air Intake		
8	3303-386		18	Bolt, Flange		
9	0806-027		1	Cover, Drive Belt		
10	0830-056		1	Gasket		
11	0829-046		6	Pin, Dowel		
12	0832-023		1	Bearing		
13	3303-347		1	Ring, Retaining		
14	3304-544		2	Screw, Cap		
15	3303-591		3	Washer		

Item	Part No.	New Part	Qty	Name	Context	Footnote
16	3307-053		22	Bolt, Flange		
17	3307-054		1	Screw, Cap		
18	3307-062		2	Screw, Cap		
19	3307-060		1	Screw, Cap		
20	0806-122		1	Cover, Magneto		
21	0830-057		1	Gasket		
22	0806-099		1	Plug		
23	0830-141		1	Washer, Crush		
24	0806-029		1	Stick, Oil Level	(inc. 25)	
25	3304-102		1	O-Ring		
26	0832-053		1	Bearing		
27	3305-943		1	Ring, Retaining		
28	3305-944		1	Bearing		
29	3305-942		1	Ring, Retaining		
30	0830-206		1	Gasket		
31	3301-716		2	Pin, Dowel		
32	0812-087		1	Plug - Assembly	(inc. 33)	
33	0835-016		1	O-Ring		
34	3307-055		1	Screw, Cap		
35	3304-189		5	Bolt, Flange		

COOLING ASSEMBLY [302349]

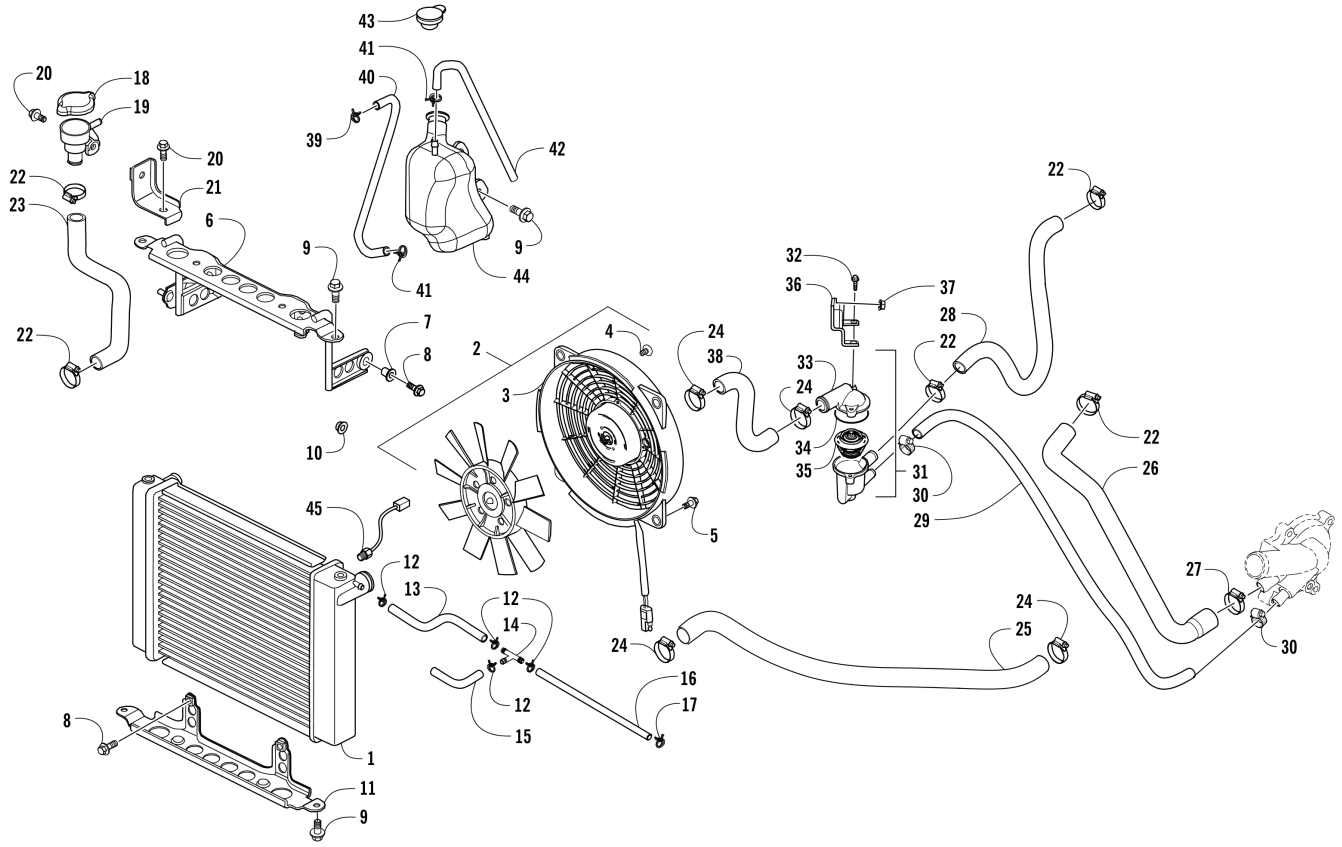

Item	Part No.	New Part	Qty	Name	Context	Footnote
1	3306-334		1	Radiator		
2	3306-333		1	Fan, Cooling - Assembly	(inc. 3-4)	
3	3306-335		1	Shroud, Fan		
4	3306-405		4	Screw, Shoulder		
5	3304-587		4	Screw, Cap		
6	3306-376		1	Bracket, Mounting - Upper		
7	3303-226		2	Insert		
8	3304-551		4	Bolt, Flange - 6 x 22		
9	3304-652		6	Screw, Cap		
10	0423-028		2	Bushing, Stem		
11	3306-348		1	Bracket, Mounting - Lower		
12	3304-161		5	Clamp, Hose		
13	3306-345		1	Hose, Coolant - Radiator/T-Fitting		
14	3306-346		1	T-Fitting		
15	3306-374		1	Hose, Coolant - T-Fitting/Filler Neck		
16	3306-375		1	Hose, Coolant - T-Fitting/Engine		
17	3306-349		1	Clamp, Hose		
18	3303-748		1	Cap, Filler Neck		
19	3303-738		1	Neck, Filler		
20	3304-553		2	Bolt, Flange - 6 x 12		

Item	Part No.	New Part	Qty	Name	Context	Footnote
21	3306-336		1	Bracket, Mounting - Filler Neck		
22	1423-008		5	Clamp, Hose		
23	3306-344		1	Hose, Coolant - Filler Neck/Radiator		
24	3306-256		4	Clamp, Hose		
25	3306-343		1	Hose, Coolant - Radiator/Water Pump		
26	0410-216		1	Hose, Coolant - Water Pump/Cylinder		
27	3305-941		1	Clamp, Hose		
28	3306-255		1	Hose, Coolant - Thermostat/Cylinder		
29	3306-258		1	Hose, Coolant - Thermostat/Water Pump		
30	0423-098		2	Clamp, Hose		
31	0808-192		1	Housing, Thermostat - Assembly	(inc. 32-35)	
32	3303-384		2	Bolt, Flange		
33	0808-202		1	Cover, Housing - Thermostat		
34	0830-205		1	O-Ring		
35	0813-050		1	Thermostat		
36	3306-260		1	Bracket, Mounting - Thermostat Housing		
37	3304-654		1	Nut, Lock		
38	3306-257		1	Hose, Coolant - Radiator/Thermostat		
39	3303-349		1	Clamp, Hose		
40	3306-340		1	Hose, Coolant - Reservoir/Filler Neck		
41	3304-163		2	Clamp, Hose		
42	3306-339		1	Hose, Vent		
43	3303-749		1	Cap, Reservoir		
44	3313-661		1	Tank, Reservoir		
45	3303-862		1	Switch, Cooling Fan		

CRANK BALANCER ASSEMBLY [301454]

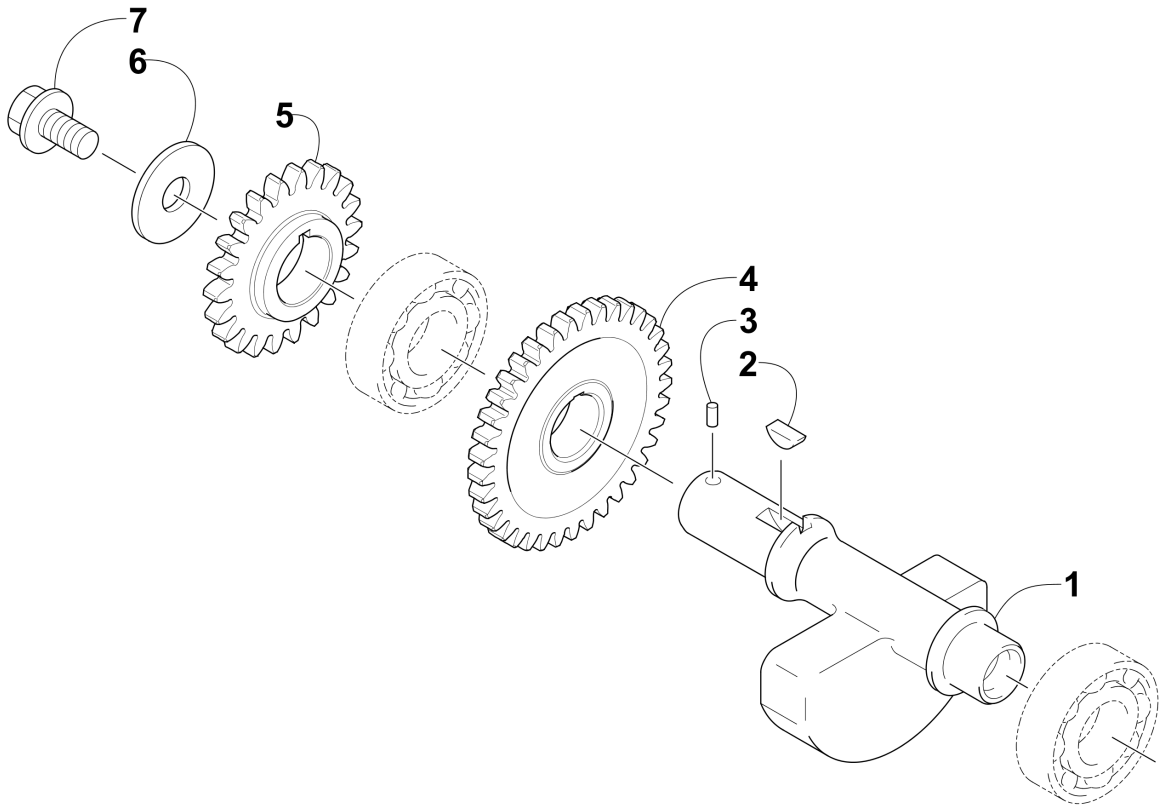

Item	Part No.	New Part	Qty	Name	Context	Footnote
1	0811-035		1	Balancer, Crank		
2	0829-037		1	Key		
3	3304-144		1	Pin, Alignment		
4	0811-006		1	Gear, Driven		
5	0811-009		1	Gear, Oil Pump Drive		
6	0828-091		1	Washer		
7	0826-118		1	Screw, Cap		

CRANKCASE ASSEMBLY [300573]

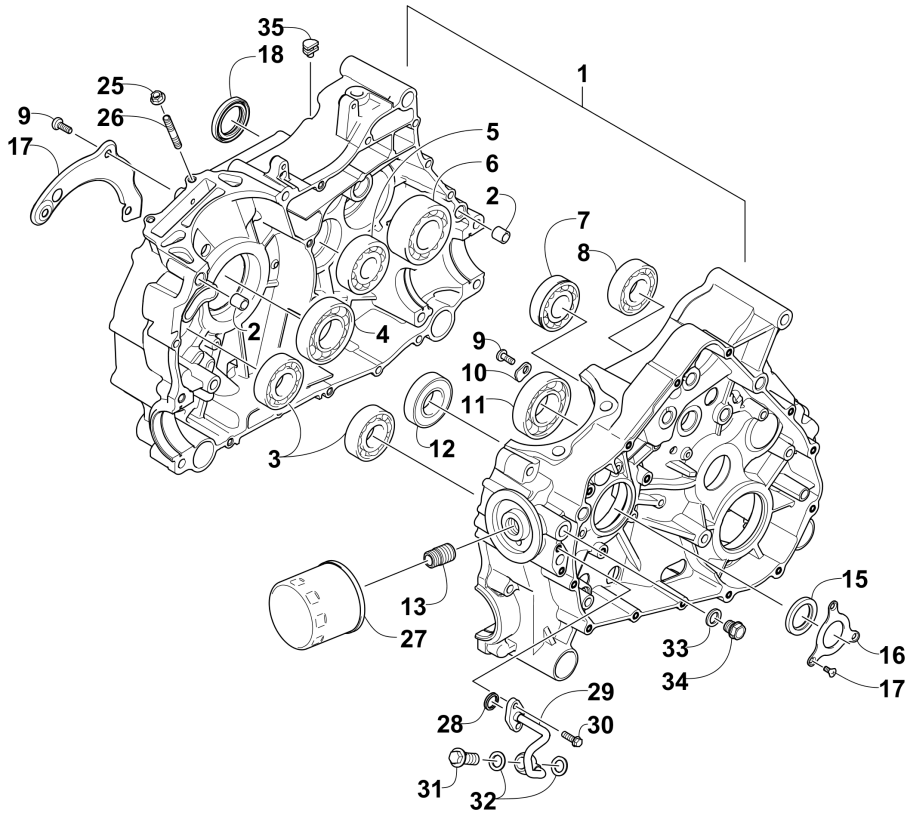

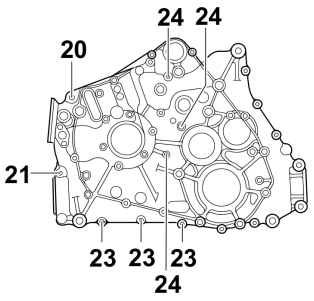

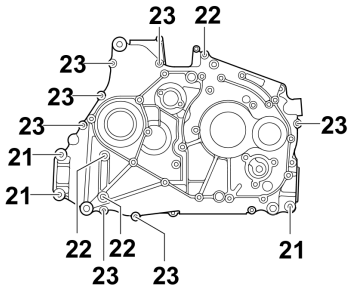

Item	Part No.	New Part	Qty	Name	Context	Footnote
1	0801-191		1	Crankcase - Assembly	(inc. 2-22)	
2	0829-050		2	Pin, Dowel		
3	3313-745		2	Bearing		
4	0832-087		1	Bearing		
5	3304-198		1	Bearing		
6	0832-074		1	Bearing		
7	3304-195		1	Bearing		
8	3304-699		1	Bearing, Ball - Radial		
9	0826-144		6	Screw, Machine		
10	0822-104		2	Retainer, Bearing		
11	0832-019		1	Bearing		
12	0832-020		1	Bearing		
13	0812-066		1	Union, Oil Filter		
14	0830-058		1	Seal		
15	0805-018		1	Retainer		
16	0826-145		3	Screw, Machine		
17	0801-018		1	Plate, Oil Guide - Right		
18	0830-066		1	Seal		
19	0801-027		1	Tube, Vent - Crankcase		
20	3303-372		1	Screw, Cap		

Item	Part No.	New Part	Qty	Name	Context	Footnote
21	0826-126		4	Screw, Cap		
22	0826-064		3	Screw, Cap		
23	3303-387		10	Screw, Cap		
24	0826-065		3	Screw, Cap		
25	3304-654		2	Nut, Lock		
26	3313-721		2	Bolt, Stud		
27	0812-034		1	Filter, Oil		
28	0830-172		1	O-Ring		
29	0812-086		1	Oilline		
30	3303-617		2	Bolt, Flange		
31	0812-084		1	Bolt, Banjo-Fitting		
32	0812-085		2	Washer		
33	0830-143		1	Washer, Compression - 14 x 19 x 1.35		
34	0835-004		1	Plug, Oil Pressure		
35	3313-744		1	Grommet		

CRANKSHAFT AND PISTON ASSEMBLY [301452]

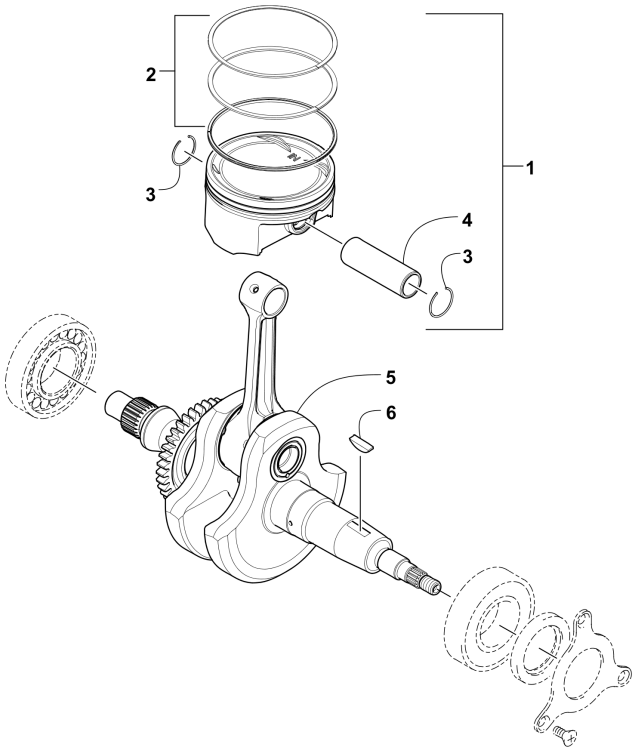

Item	Part No.	New Part	Qty	Name	Context	Footnote
1	0805-333		1	Piston Set	(inc. 2-4)	
2	0805-320		1	Ring, Piston - Set		
3	0831-060		2	Circlip		
4	0805-023		1	Pin, Piston		
5	0805-013		1	Crankshaft Assembly		
6	0829-039		1	Key		

CYLINDER ASSEMBLY [92762]

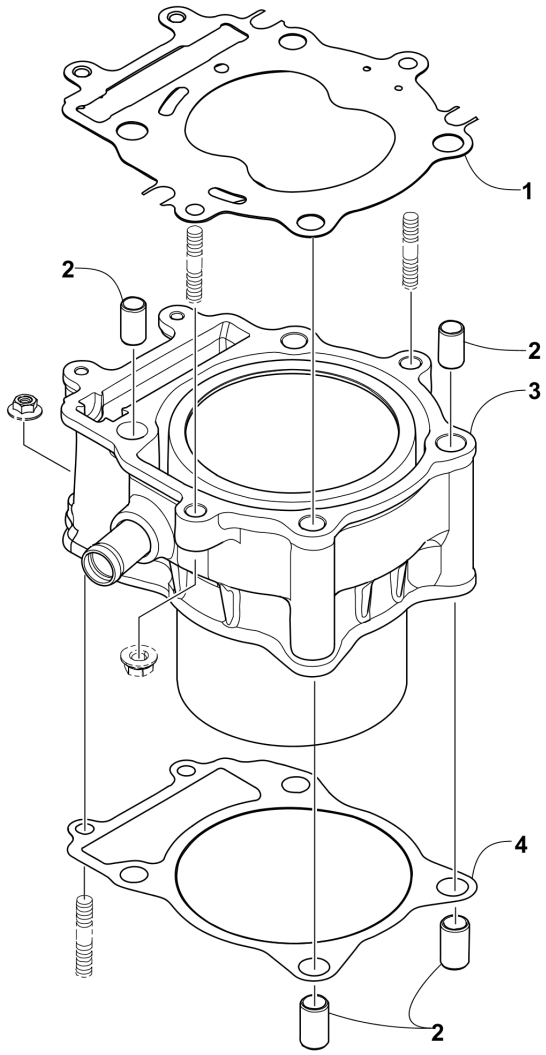

Item	Part No.	New Part	Qty	Name	Context	Footnote
1	0830-203		1	Gasket, Cylinder Head		
2	0829-046		4	Pin, Dowel		
3	0804-056		1	Cylinder		
4	0830-204		1	Gasket, Cylinder		

CYLINDER HEAD AND CAMSHAFT/VALVE ASSEMBLY [300571]

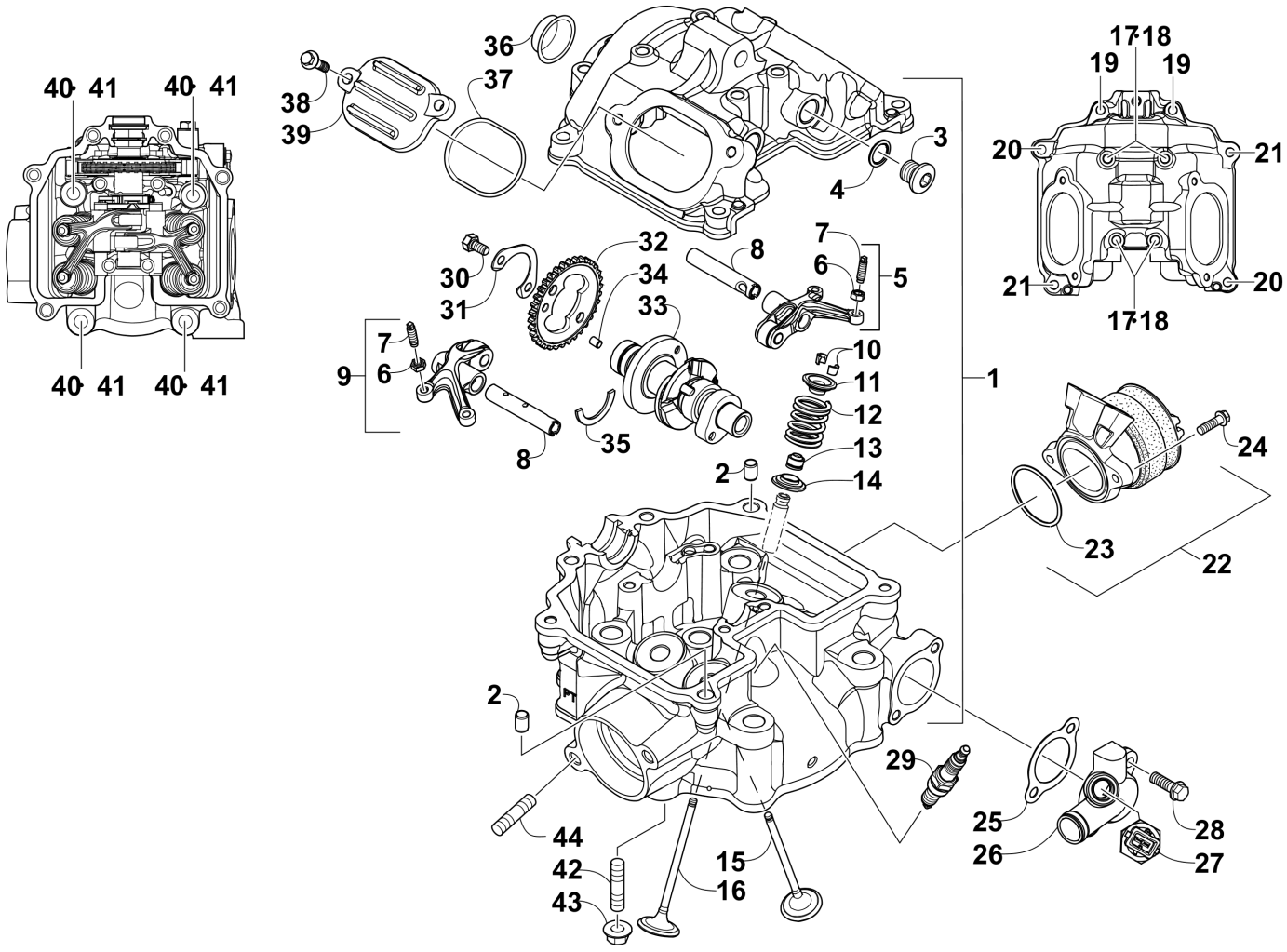

Item	Part No.	New Part	Qty	Name	Context	Footnote
1	0808-205		1	Head, Cylinder	(inc. 2-17)	
2	3303-341		2	Pin, Dowel		
3	0831-053		2	Plug, Shaft		
4	0830-143		2	Washer, Compression - 14 x 19 x 1.35		
5	0809-254		1	Arm, Valve Rocker - Intake	(inc. 6-7)	
6	3304-026		4	Nut, Tappet Adjusting		
7	3304-007		4	Screw, Tappet Adjusting		
8	0809-256		2	Shaft, Rocker Arm		
9	0809-252		1	Arm, Valve Rocker - Exhaust	(inc. 6-7)	
10	3303-044		8	Cotter, Valve		
11	0809-142		4	Retainer, Spring		
12	0809-257		4	Spring, Valve		
13	0809-190		4	Seal, Oil		
14	0809-141		4	Seat, Spring		
15	0809-266		2	Valve, Exhaust		
16	0809-263		2	Valve, Intake		

Item	Part No.	New Part	Qty	Name	Context	Footnote
17	3304-904		4	Screw, Cap		
18	0830-155		4	Gasket		
19	3304-918		2	Screw, Cap		
20	0826-136		2	Screw, Cap		
21	3303-384		2	Bolt, Flange		
22	3306-249		1	Manifold, Intake	(inc. 23)	
23	0830-202		1	O-Ring		
24	3304-189		2	Bolt, Flange		
25	0830-200		1	Gasket		
26	3306-246		1	Fitting, Coolant - Assembly		
27	0824-051		1	Sensor, Engine Coolant Temperature		
28	3303-617		2	Bolt, Flange		
29	0217-708		1	Plug, Spark	CR7E	
30	0826-154		2	Screw, Cap		
31	0828-086		1	Plate, Retainer		
32	0809-259		1	Sprocket		
33	3306-247		1	Camshaft	(inc. 34)	
34	0829-036		1	Pin, Alignment		
35	0809-165		1	C-Ring		
36	3306-787		1	Plug, Head		
37	0830-139		2	O-Ring		
38	3303-383		4	Bolt		
39	0808-111		2	Cap, Inspection		
40	0826-062		4	Screw, Cap		
41	0828-044		4	Washer		
42	0827-064		2	Bolt, Stud		
43	3304-668		2	Nut, Lock		
44	0827-065		2	Bolt, Stud		

DRIVE TRAIN ASSEMBLY [301928]

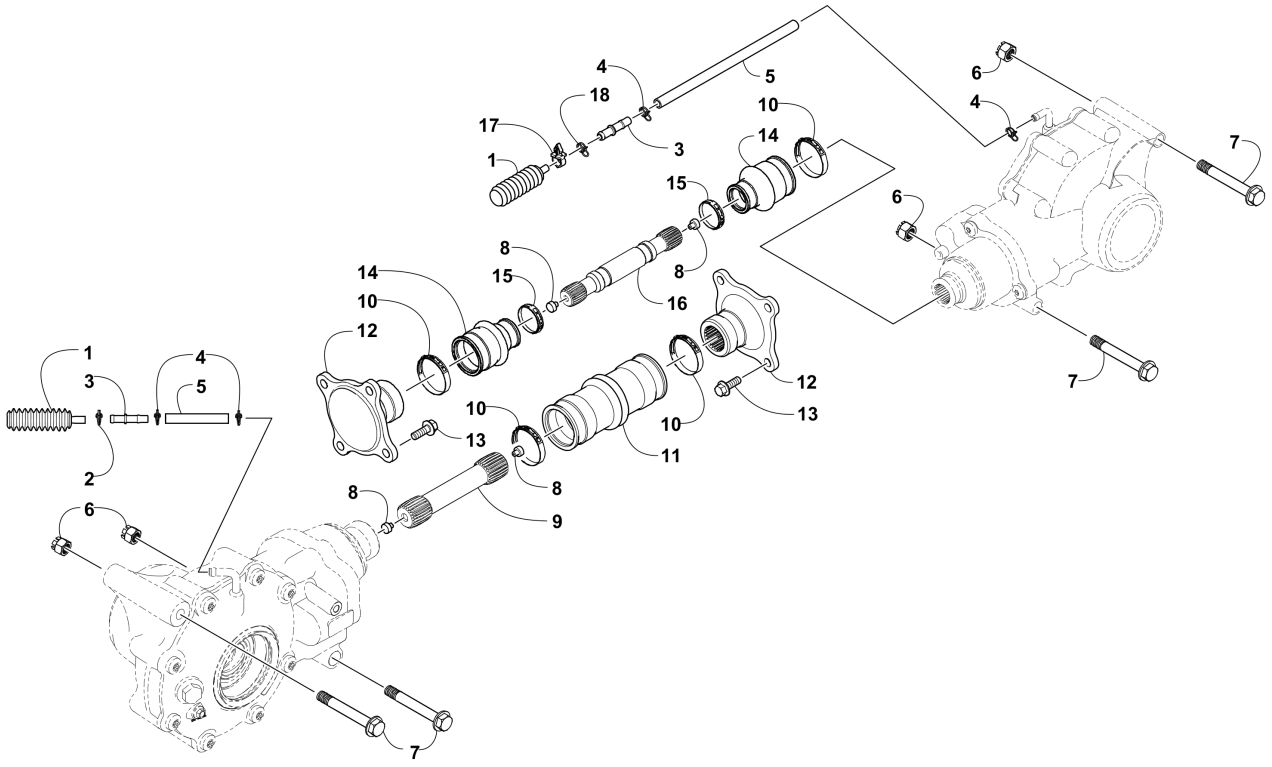

Item	Part No.	New Part	Qty	Name	Context	Footnote
1	3313-796		2	Bladder, Gearcase		
2	3323-149		1	Clamp, Hose		
3	3323-150		2	Fitting, Vent		
4	3313-684		4	Clamp, Hose		
5	0410-070		AR	Hose - 25 ft		
6	3304-031		4	Nut, Lock		
7	3305-787		4	Screw, Cap		
8	3313-783		4	Bumper, Propeller Shaft		
9	3313-784		1	Shaft, Propeller		
10	3313-776		4	Clamp		
11	3313-825		1	Boot, Coupler		
12	3307-767		2	Flange, Output		
13	3304-565		8	Bolt, Flange - 8 x 20		
14	0402-985		2	Boot		
15	3313-777		2	Clamp		
16	3313-773		1	Shaft, Propeller		
17	3323-152		1	Clip, Routing		
18	3303-349		1	Clamp, Hose		

ENGINE AND EXHAUST [302348]

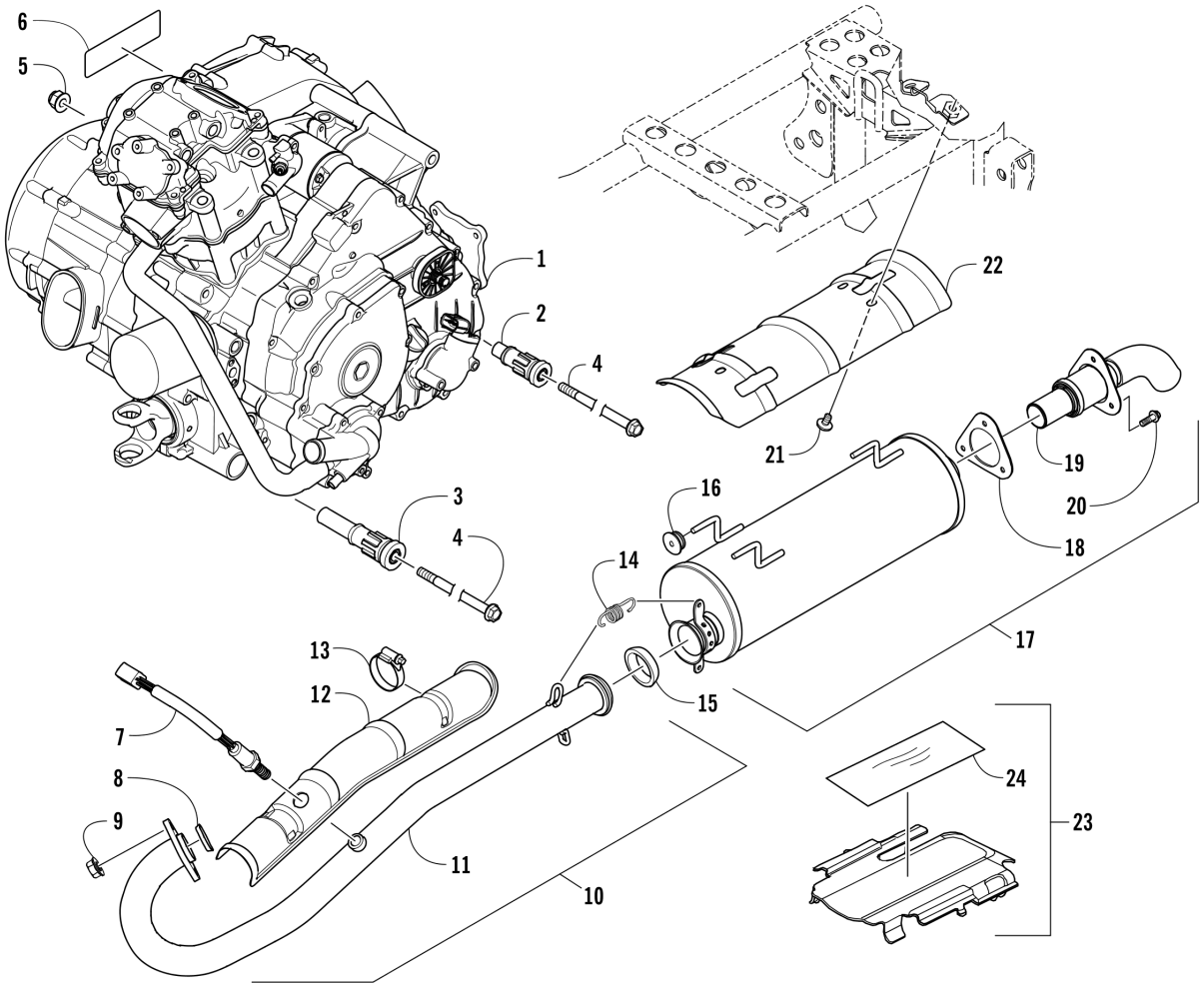

Item	Part No.	New Part	Qty	Name	Context	Footnote
1	3313-846		1	Engine	(inc. 2-3)	
2	0801-188		3	Mount, Rubber - Engine		
3	0801-189		1	Mount, Rubber - Engine		
4	3323-174		2	Screw, Cap		
5	3304-031		2	Nut, Lock		
6	0411-426		1	Decal, Warning		
7	3306-877		1	Sensor, Oxygen		
8	3313-743		1	Gasket, Exhaust Pipe		
9	3303-332		2	Nut		
10	3306-876		1	Pipe, Exhaust - Assembly	(inc. 11-13)	
11	3306-875		1	Pipe, Exhaust		
12	3306-874		1	Shield, Exhaust		
13	0423-317		2	Clamp		
14	0612-668		2	Spring		
15	3306-315		1	Seal, Exhaust		

Item	Part No.	New Part	Qty	Name	Context	Footnote
16	3313-264		3	Bushing		
17	3306-551		1	Muffler - Assembly	(inc. 18-20)	
18	3313-708		1	Gasket, Spark Arrester		
19	3313-707		1	Arrester, Spark - Assembly		
20	3313-710		3	Screw, Cap		
21	3313-711		3	Screw, Cap		
22	3313-026		1	Cover, Muffler		
23	3313-596		1	Shield, Gearcase	(inc. 24)	
24	3306-582		1	Foil, Protective		

FRAME AND RELATED PARTS [302343]

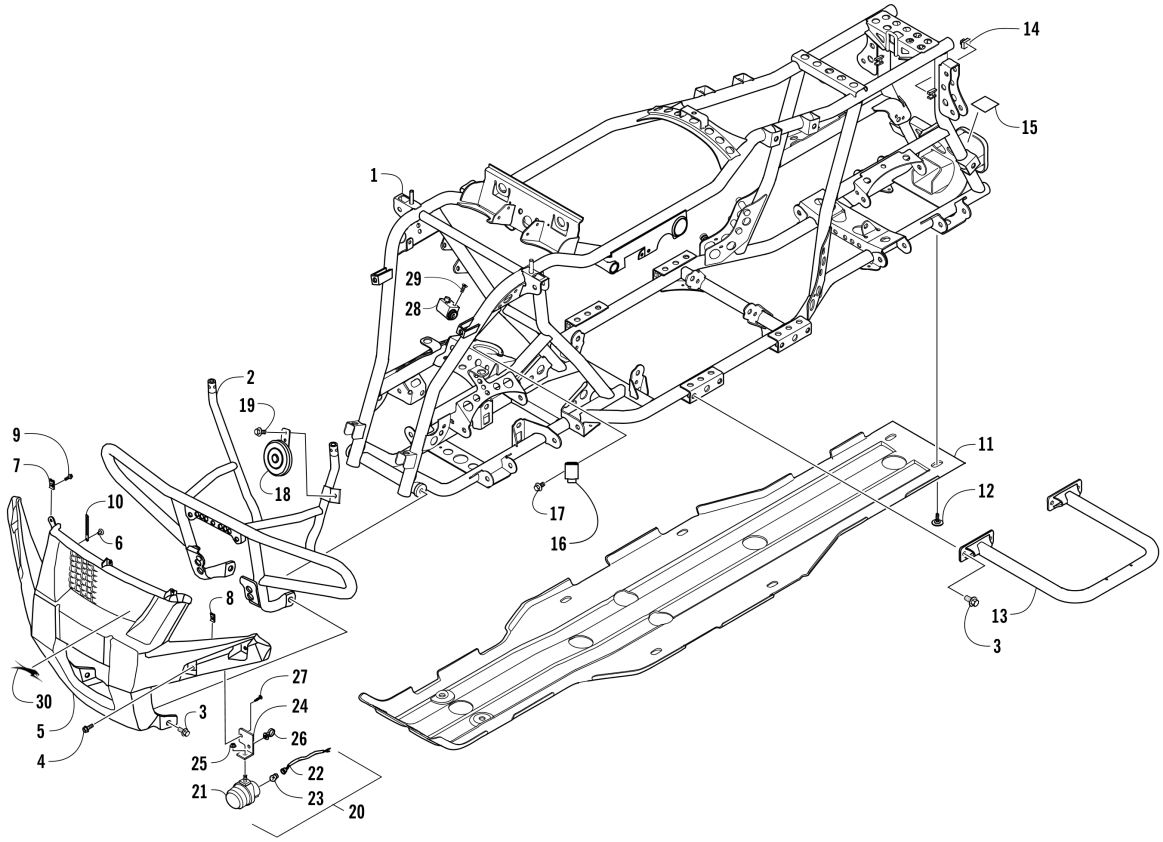

Item	Part No.	New Part	Qty	Name	Context	Footnote
1	3307-864		1	Frame, Main		
2	3307-186		1	Bumper - Front		
3	3304-543		12	Screw, Cap		
4	3304-587		6	Screw, Cap		
5	3307-145		1	Fascia, Bumper		
6	3304-586		2	Screw, Cap		
7	3303-267		4	Clip, U-Nut		
8	3304-061		4	Nut Clip 5 mm		
9	3304-029		5	Bolt, Washer - 5 x 16		
10	3304-157		2	Clamp, Routing		
11	3313-755		1	Plate, Skid		
12	0423-545		10	Screw, Shoulder		
13	3313-351		2	Footrest		
14	3306-329		2	Cushion		
15	4411-550		1	Decal, Warning - Towing		
16	3307-863		1	Relay, Blinker		
17	3305-344		2	Screw, Cap		
18	3313-576		1	Horn, Electric - 12V		
19	3304-553		1	Bolt, Flange - 6 x 12		
20	3307-868		1	Assembly, Blinker - Right	(inc 21-23)	

Item	Part No.	New Part	Qty	Name	Context	Footnote
20	3307-869		1	Assembly, Blinker - Left	(inc 21-23)	
21	3307-870		1	Lens Assembly - Right		
21	3307-871		1	Lens Assembly - Left		
22	3307-872		1	Socket, Right		
22	3307-873		1	Socket, Left		
23	3304-825		2	Bulb		
24	3307-850		1	Bracket, Blinker - Right		
24	3307-851		1	Bracket, Blinker - Left		
25	3307-875		2	Nut		
26	3307-867		2	Cable, Strap		
27	3304-650		2	Screw, Self-Tapping		
28	3307-672		1	Lock, Steering		
29	3305-395		2	Screw, Machine		
30	4411-479		1	Decal, AirCat		

FRONT BODY, RACK, AND HEADLIGHT ASSEMBLY [302340]

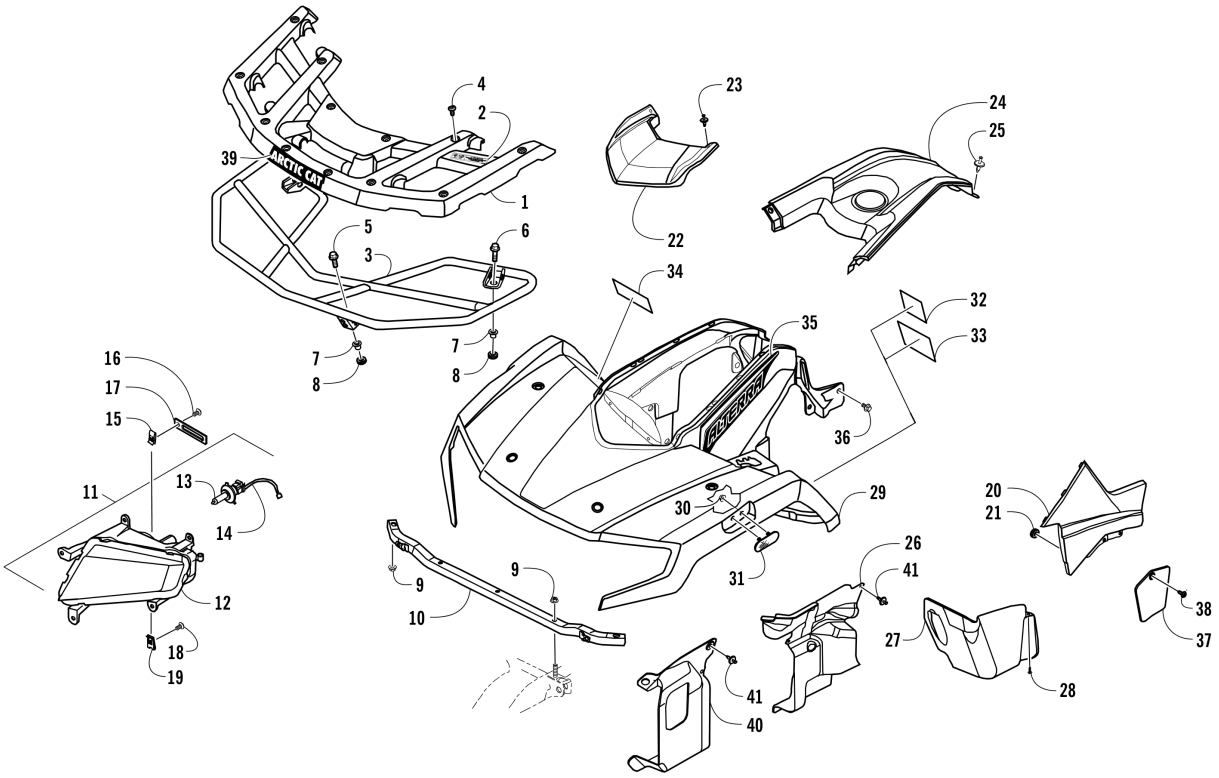

Item	Part No.	New Part	Qty	Name	Context	Footnote
1	3307-189		1	Panel, Front Rack - Assembly	(inc. 2)	
2	1411-681		1	Decal, Warning - Load		
3	3307-181		1	Rack, Front		
4	3304-650		12	Screw, Self-Tapping		
5	3313-522		2	Screw, Cap		
6	3313-713		2	Screw, Cap		
7	0423-669		4	Spacer		
8	0423-465		4	Grommet		
9	3304-668		4	Nut, Lock		
10	3307-196		1	Tube, Mounting		
11	3307-134		1	Headlight - Assembly - Right	(inc. 12-14)	
11	3307-135		1	Headlight - Assembly - Left	(inc. 12-14)	
12	3307-132		1	Lens, Headlight - Right		
12	3307-133		1	Lens, Headlight - Left		
13	3303-846		2	Bulb, Headlight		
14	3307-136		2	Socket, Headlight - Assembly		
15	3304-061		4	Nut Clip 5 mm		
16	3304-029		4	Bolt, Washer - 5 x 16		
17	3304-157		2	Clamp, Routing		
18	3307-137		2	Screw, Cap		

Item	Part No.	New Part	Qty	Name	Context	Footnote
19	3303-267		2	Clip, U-Nut		
20	3307-164		1	Panel, Side - Lower - Right - Green		
20	3307-165		1	Panel, Side - Lower - Left - Green		
21	0423-678		10	Grommet		
22	3307-146		1	Cover, Access		
23	3303-592		4	Clip, Retaining		
24	3307-139		1	Cover, Gas Tank		
25	3304-057		2	Clip, Fender		
26	3306-284		1	Panel, Splash - Rear Right		
26	3306-285		1	Panel, Splash - Rear Left		
27	3313-754		1	Shield, Linkage		
28	3304-650		15	Screw, Self-Tapping		
29	3307-142	X	1	Panel, Fender - Front - Green	(inc. 30-34)	
30	3304-774		2	Nut		
31	3313-359		2	Reflector - Front		
32	1411-804		1	Decal, Warning - Age (16)		
33	3304-806		1	Decal, Warning - General		
34	4411-818		1	Decal, Warning - Turn/Hill		
35	5411-956		1	Decal, Side - Upper Right - Green		
35	5411-957		1	Decal, Side - Upper Left - Green		
36	3305-783		2	Screw, Cap		
37	3306-285		1	Panel, Splash - Rear Left		
38	3303-592		1	Clip, Retaining		
39	5411-392		1	Decal, Arctic Cat		
40	3306-286		1	Panel, Splash - Front Right		
40	3306-353		1	Panel, Splash - Front Left		
41	3305-448		4	Clip, Retaining		

FRONT DRIVE GEARCASE ASSEMBLY [301367]

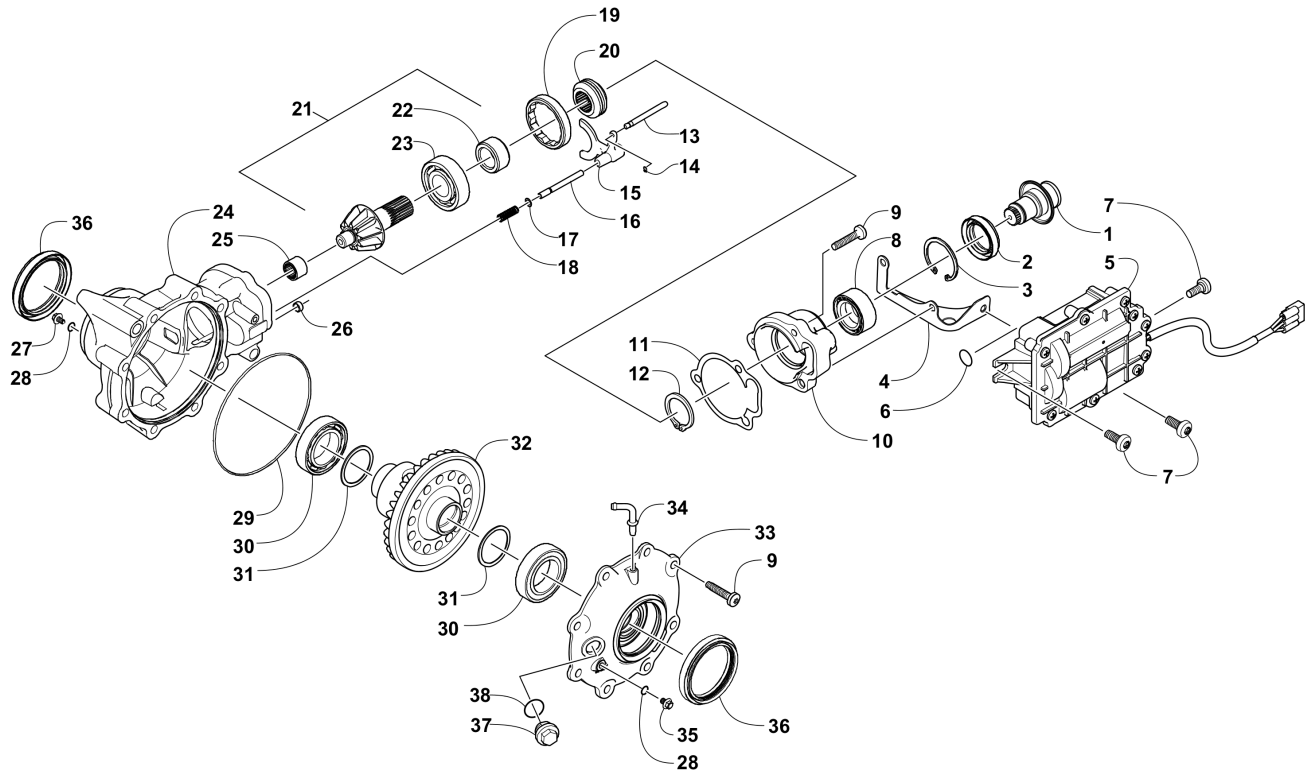

Item	Part No.	New Part	Qty	Name	Context	Footnote
-	3306-265		1	Complete Front Drive Gearcase Assembly		
1	3306-047		1	Shaft, Input		
2	3323-239		1	Seal		
3	3306-046		1	Ring, Retaining		
4	3323-241		1	Bracket, Actuator		
5	3306-264		1	Actuator		
6	3313-792		1	O-Ring		
7	3313-797		3	Screw, Self-Tapping		
8	3323-240		1	Bearing		
9	3305-513		11	Bolt, Flange		
10	3323-238		1	Housing, Pinion		
11	3323-234		1	Gasket, Flange		
12	3306-045		1	Ring, Retaining		
13	3323-235		1	Shaft, Selector		
14	3313-791		1	Ring, Retaining		
15	3323-236		1	Fork, Selector		
16	3323-233		1	Shaft, Shuttle		
17	3313-790		1	O-Ring		
18	3313-789		1	Spring, Return		

Item	Part No.	New Part	Qty	Name	Context	Footnote
19	3313-788		1	Collar, Lock		
20	3323-232		1	Coupler, Drive		
21	3306-039		1	Gear, Pinion - Assembly - 11T	(inc. 22-23)	
22	0402-336		1	Collar, Retaining		
23	3306-040		1	Bearing		
24	3313-793		1	Housing, Gearcase		
25	3306-038		1	Bearing		
26	3306-048		1	Pin, Dowel		
27	3306-027		1	Plug, Magnetic	(inc. one No. 28)	
28	0423-153		2	O-Ring		
29	3306-030		1	O-Ring		
30	3306-801		2	Bearing		
31	3306-132		AR	Shim, 41 x 49 x 1.0 mm		
31	3306-133		AR	Shim, 41 x 49 x 1.1 mm		
31	3306-134		AR	Shim, 41 x 49 x 1.2 mm		
31	3306-135		AR	Shim, 41 x 49 x 1.3 mm		
31	3306-136		AR	Shim, 41 x 49 x 1.4 mm		
31	3306-137		AR	Shim, 41 x 49 x 1.5 mm		
31	3306-138		AR	Shim, 41 x 49 x 1.6 mm		
31	3306-139		AR	Shim, 41 x 49 x 1.7 mm		
32	3313-794		1	Gear, Ring - 34T		
33	3313-795		1	Cover, Gearcase		
34	3306-034		1	Fitting, Elbow		
35	3306-036		1	Plug, Oil Level	(inc. one No. 28)	
36	3306-025		2	Seal		
37	3306-035		1	Plug, Fill	(inc. 38)	
38	0423-154		1	O-Ring		

FRONT SUSPENSION ASSEMBLY [301924]

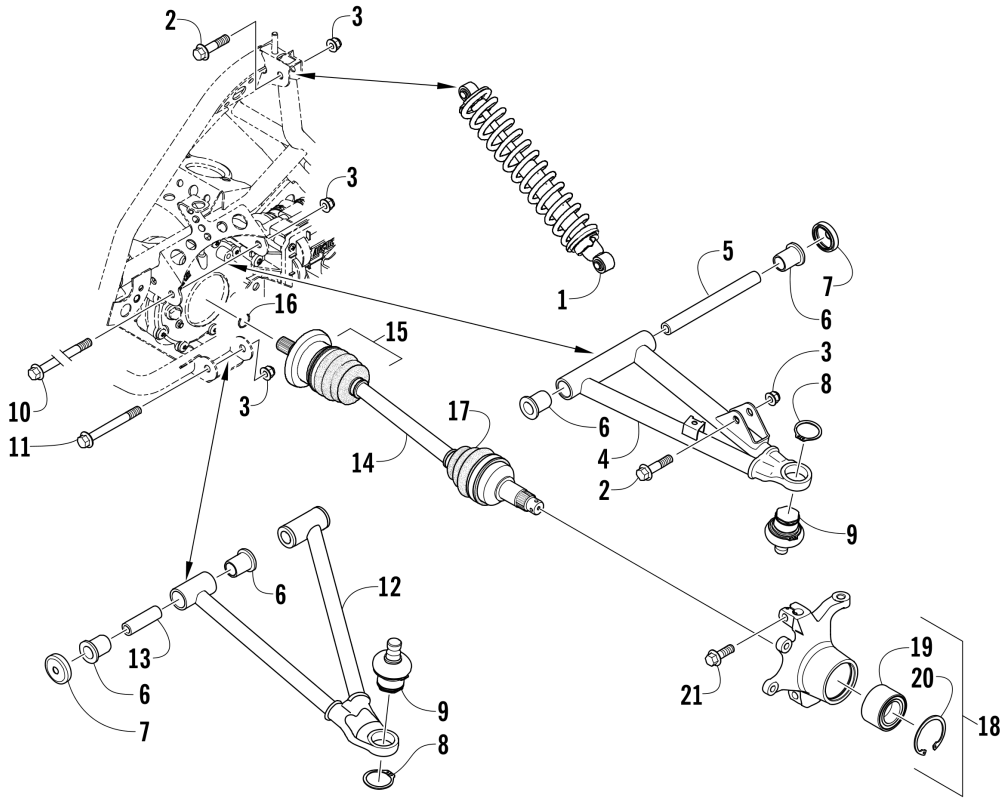

Item	Part No.	New Part	Qty	Name	Context	Footnote
1	3307-768		2	Shock/Spring Assembly - White		
2	3307-068		4	Screw, Cap		
3	3304-031		10	Nut, Lock		
4	3306-866		1	A-Arm, Upper Right - Black	(inc. 5-9)	
4	3306-867		1	A-Arm, Upper Left - Black	(inc. 5-9)	
5	3313-111		2	Sleeve, Suspension		
6	3313-112		12	Bushing		
7	3313-113		12	Seal		
8	0423-009		4	Ring, Retaining		
9	0405-483		4	Ball Joint		
10	3313-430		2	Screw, Cap		
11	3304-183		4	Screw, Cap		
12	3313-082		1	A-Arm, Lower Right - Black	(inc. 6-9 and 13)	
12	3313-083		1	A-Arm, Lower Left - Black	(inc. 6-9 and 13)	
13	3313-107		4	Axle		
14	3313-831		2	Halfshaft, Front	(inc. 15-17)	
15	3313-560		2	Service Kit, Differential Side Boot (In Board)	(inc. 16)	
16	0423-844		2	Clip, Retaining - Inboard		
17	3306-425		2	Repair Kit, Boot - Drive Axle - Outbound		
18	3323-130		1	Knuckle - Assembly - Right	(inc. 19-20)	

Item	Part No.	New Part	Qty	Name	Context	Footnote
18	3323-131		1	Knuckle - Assembly - Left	(inc. 19-20)	
19	1402-809		2	Bearing		
20	0423-423		2	Ring, Retaining		
21	3323-127		4	Screw, Cap		

GAS TANK ASSEMBLY [302347]

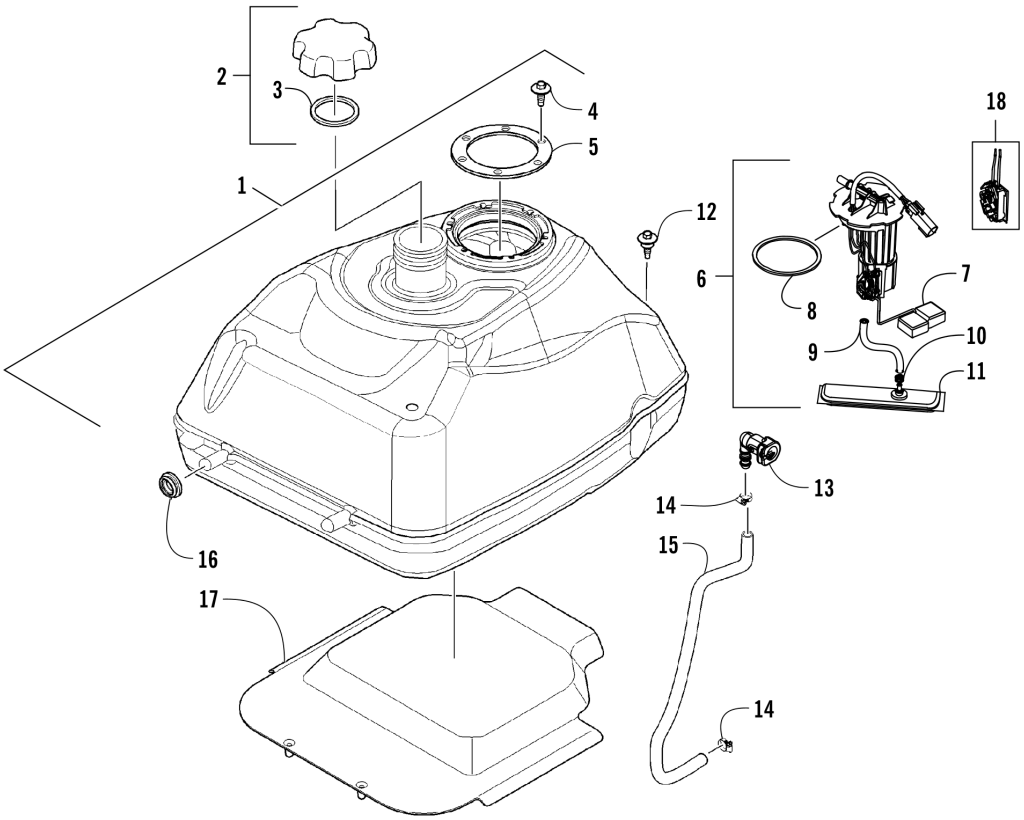

Item	Part No.	New Part	Qty	Name	Context	Footnote
1	3306-244		1	Tank, Gas - Assembly	(inc. 2-5)	
2	3306-297		1	Cap, Gas Tank	(inc. 3)	
3	3306-298		1	Gasket, Gas Tank Cap		
4	3306-300		6	Bolt, Washer - 5 x 16		
5	3306-299		1	Plate, Retaining		
6	3307-076		1	Pump, Fuel - Assembly	(inc. 7-11)	
7	2670-235		1	Float		
8	3313-845		1	Seal		
9	3307-080		1	Tube, Filter		
10	3307-079		1	Clip		
11	3307-077		1	Fuel Filter		
12	0423-732		1	Screw, Shoulder		
13	1670-878		1	Fitting, Quick-Connect		
14	0623-373		2	Clamp, Hose		
15	3307-114		1	Hose, Fuel - Assembly		

Item	Part No.	New Part	Qty	Name	Context	Footnote
16	0423-460		2	Grommet		
17	3313-833		1	Shield, Heat		
18	1770-170		1	Fuel Level Sensor Kit		

GEAR SHIFTING ASSEMBLY [94326]

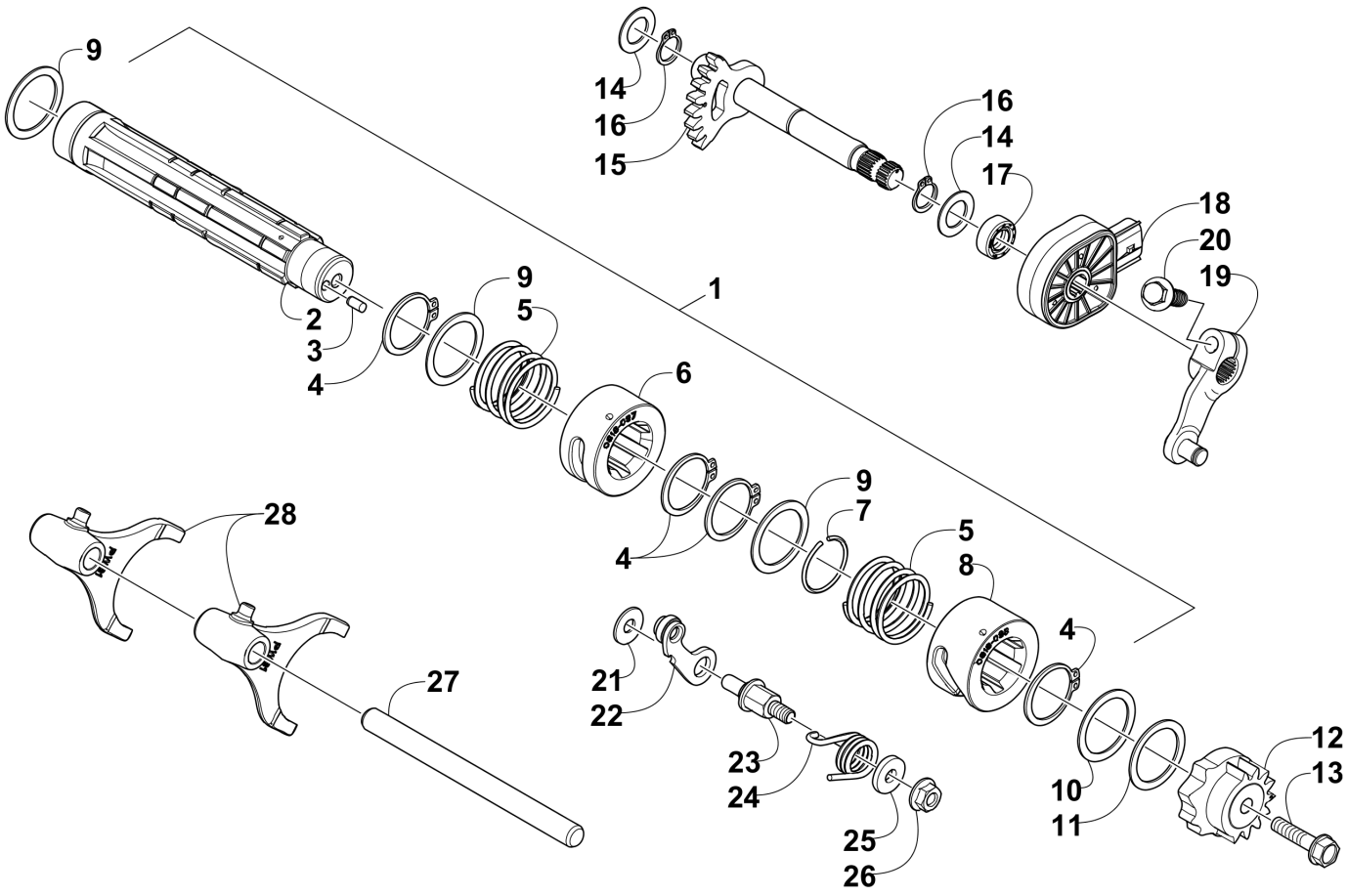

Item	Part No.	New Part	Qty	Name	Context	Footnote
1	0818-126		1	Drum, Gear Shift - Assembly	(inc. 2-8 and two No. 9)	
2	0818-125		1	Shaft, Shift		
3	3304-439		1	Pin, Dowel		
4	3304-147		4	Circlip, External - 25 mm		
5	0818-060		2	Spring		
6	0818-117		1	Cam, Reverse - Gear Shift		
7	0831-016		1	C-Ring		
8	0818-116		1	Cam, Forward - Gear Shift		
9	0828-079		3	Washer		
10	0828-081		1	Washer, Thrust		
11	0828-080		1	Washer, Thrust		
12	0818-061		1	Plate, Gear Shift Cam		
13	3304-569		1	Screw, Cap		
14	0828-084		2	Washer		
15	0818-113		1	Shaft, Sub-Gear Shift	(inc. 16)	

Item	Part No.	New Part	Qty	Name	Context	Footnote
16	0831-056		2	Ring, Retaining		
17	0830-179		1	Seal		
18	3306-259		1	Switch, Gear Position		
19	3306-316		1	Arm, Select		
20	3304-551		1	Bolt, Flange - 6 x 22		
21	0828-083		1	Washer		
22	0818-084		1	Stopper, Cam		
23	0818-062		1	Support, Cam Stopper		
24	0818-109		1	Spring		
25	0828-082		1	Washer		
26	3304-654		1	Nut, Lock		
27	0818-021		1	Shaft, Shift Fork		
28	0818-088		2	Fork, Shift		

HANDLEBAR ASSEMBLY [302344]

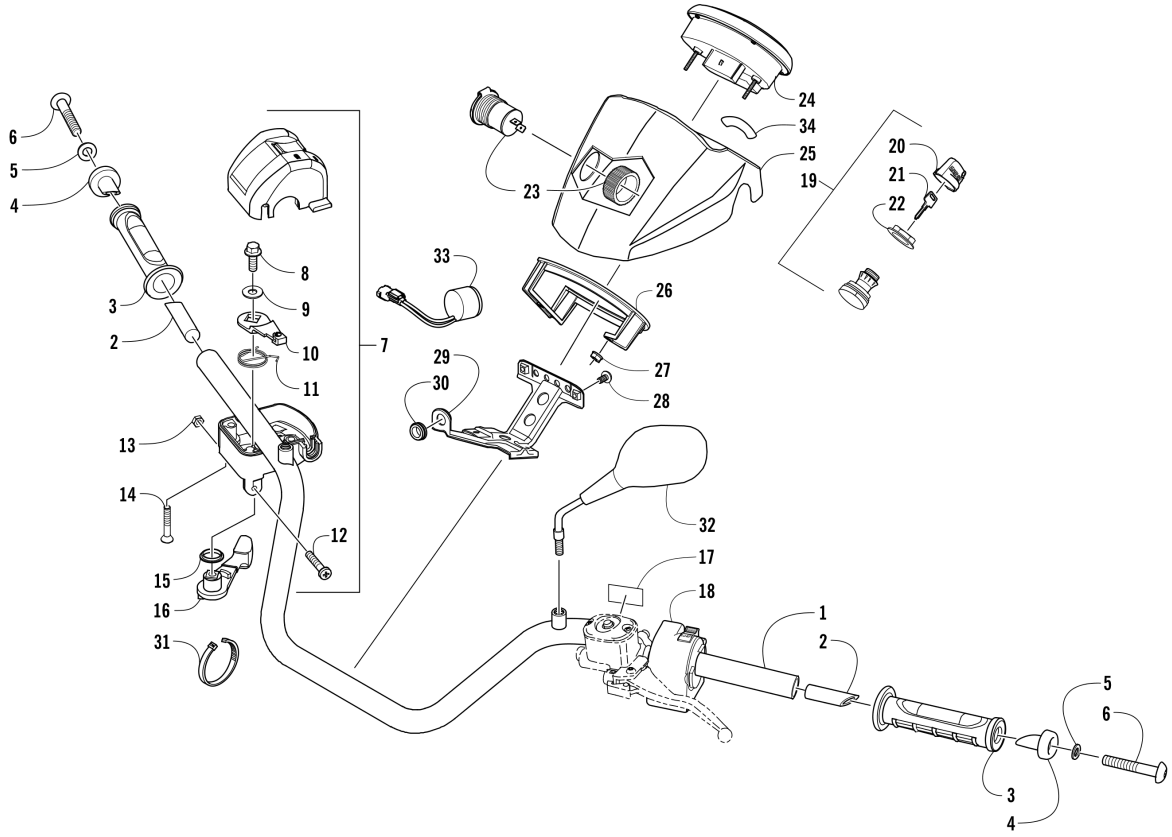

Item	Part No.	New Part	Qty	Name	Context	Footnote
1	3307-664		1	Handlebar		
2	0405-148		2	Plug, Handlebar		
3	0405-147		2	Grip, Handlebar		
4	0405-149		2	End Cap, Handlebar		
5	8050-247		2	Washer		
6	8477-845		2	Screw, Machine		
7	3306-276		1	Case, Throttle - Assembly		
8	3305-344		1	Screw, Cap		
9	3313-739		1	Washer		
10	3313-838		1	Arm, Throttle		
11	3313-839		1	Spring		
12	3313-740		1	Screw, Machine		
13	3305-832		1	Nut		
14	3313-741		2	Screw, Machine		
15	3313-841		2	Seal		
16	3313-842		1	Lever		
17	1411-865		1	Decal, Brake Lever Lock		
18	3307-663		1	Switch, Control - Assembly		
19	3307-671		1	Switch, Ignition - Assembly	(inc. 20-22)	

Item	Part No.	New Part	Qty	Name	Context	Footnote
20	0430-054		1	Cover, Key		
21	3409-007		2	Key, Blank (C Series)		
22	0430-050		1	Nut, Retaining		
23	3313-468		1	Outlet, Accessory - 12V		
24	0520-329		1	Speedometer - Assembly		
25	3307-876		1	Pod, Instrument		
26	0420-065		1	Bracket, Retaining		
27	0423-493		2	Nut w/Washer		
28	3304-404		2	Screw, Cap		
29	3307-877		1	Bracket, Mounting - Pod	(inc. 30)	
30	3303-239		1	Grommet		
31	3303-839		AR	Tie, Cable		
32	3304-803		1	Mirror Assembly - Right		
32	3304-816		1	Mirror Assembly - Left		
33	3307-879		1	Buzzer		
34	3307-461		1	Decal, Key Switch		

HYDRAULIC BRAKE ASSEMBLY [302346]

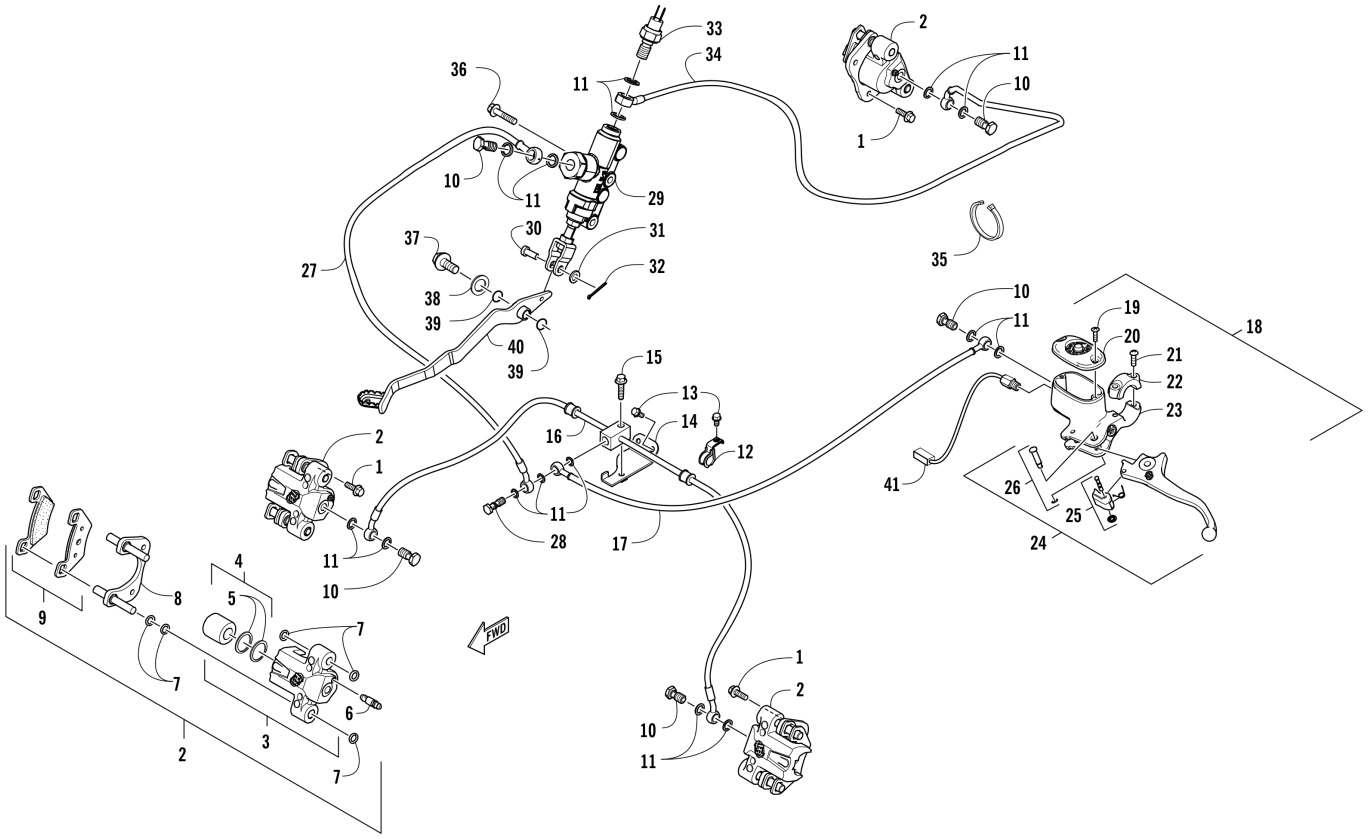

Item	Part No.	New Part	Qty	Name	Context	Footnote
1	3307-069		6	Screw, Cap		
2	3323-230		1	Caliper, Brake	(inc. 3-9) (Front Right)	
2	3323-231		2	Caliper, Brake	(inc. 3-9) (Front Left & Rear Right)	
3	1436-160		1	Housing, Caliper - Assembly	(inc. 4-6) (Front Right)	
3	1436-161		2	Housing, Caliper - Assembly	(inc. 4-6) (Front Left & Rear Right)	
4	0502-606		3	Piston/Seal Set	(inc. 5)	
5	0502-607		3	Seal Set		
6	0502-609		3	Valve, Bleed		
7	0502-608		3	O-Ring, Guide - Set		
8	0502-605		3	Bracket Assembly		
9	1436-420		3	Pad, Brake - Set		
10	3307-067		5	Bolt, Banjo-Fitting		
11	3303-284		15	Washer, Crush		
12	3303-919		2	Clamp, Brake Hose		
13	3304-553		3	Bolt, Flange - 6 x 12		
14	3313-523		1	Bracket, Mounting - Brake Hose Assembly		
15	3305-789		1	Screw, Cap		
16	3313-750		1	Hose (Junction), Brake - Assembly		

Item	Part No.	New Part	Qty	Name	Context	Footnote
17	3313-647		1	Hose, Brake		
18	3307-884		1	Brake Assembly	(inc. 19-26)	
19	0502-566		1	Screw, Machine - Kit		
20	0502-868		1	Cover, Reservoir		
21	0502-568		1	Screw, Machine - Kit		
22	0502-869		1	Clamp, Brake		
23	0502-704		1	Master Cylinder Assembly		
24	1502-904		1	Lever Assembly - Kit	(inc. 25-26)	
25	1502-905		1	Lock, Brake Lever - Kit		
26	0502-580		1	Lever Pin - Kit		
27	3313-682		1	Hose, Brake (Junction - DIRM)		
28	3304-674		1	Bolt, Oil - 10 x 33		
29	3306-370		1	Brake Assembly		
30	3306-152		1	Pin, Clevis		
31	3304-050		1	Washer		
32	3304-141		1	Pin, Cotter		
33	3313-680		1	Switch, Brake		
34	3313-681		1	Hose, Brake		
35	0123-788		AR	Tie, Cable - 8 in.		
36	3304-189		2	Bolt, Flange		
37	3304-543		1	Screw, Cap		
38	8050-252		1	Washer		
39	1602-213		2	O-Ring		
40	3313-156		1	Lever, Brake - Black		
41	2402-386		1	Sensor, Fluid Level		

LICENSE PLATE HOLDER ASSEMBLY [302353]

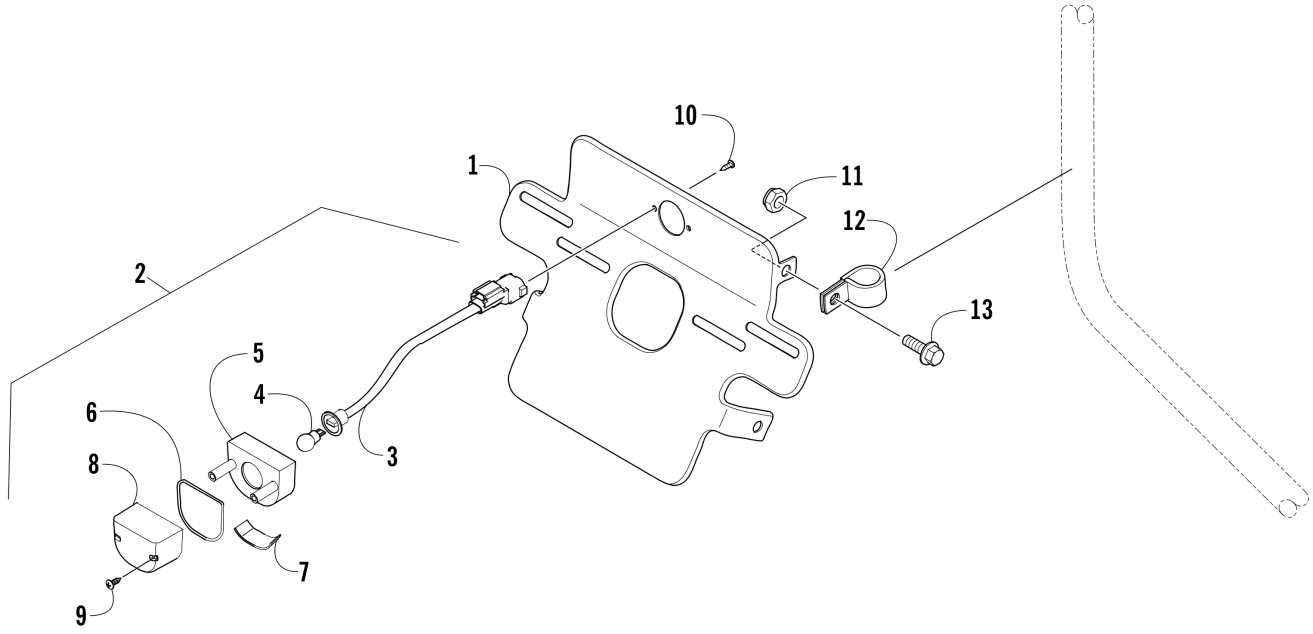

Item	Part No.	New Part	Qty	Name	Context	Footnote
1	2506-808		1	Holder, License Plate		
2	0509-151		1	Light Assembly	(inc. 3-9)	
3	3305-369		1	Harness		
4	3303-847		1	Bulb		
5	3305-367		1	Base		
6	3305-366		1	Seal		
7	3305-368		1	Lens		
8	3305-365		1	Cover		
9	3305-399		2	Screw, Self-Tapping		
10	3304-651		2	Screw, Self-Tapping		
11	3304-668		4	Nut, Lock		
12	3313-606		4	Clamp		
13	3304-565		4	Bolt, Flange - 8 x 20		

MAGNETO ASSEMBLY [301458]

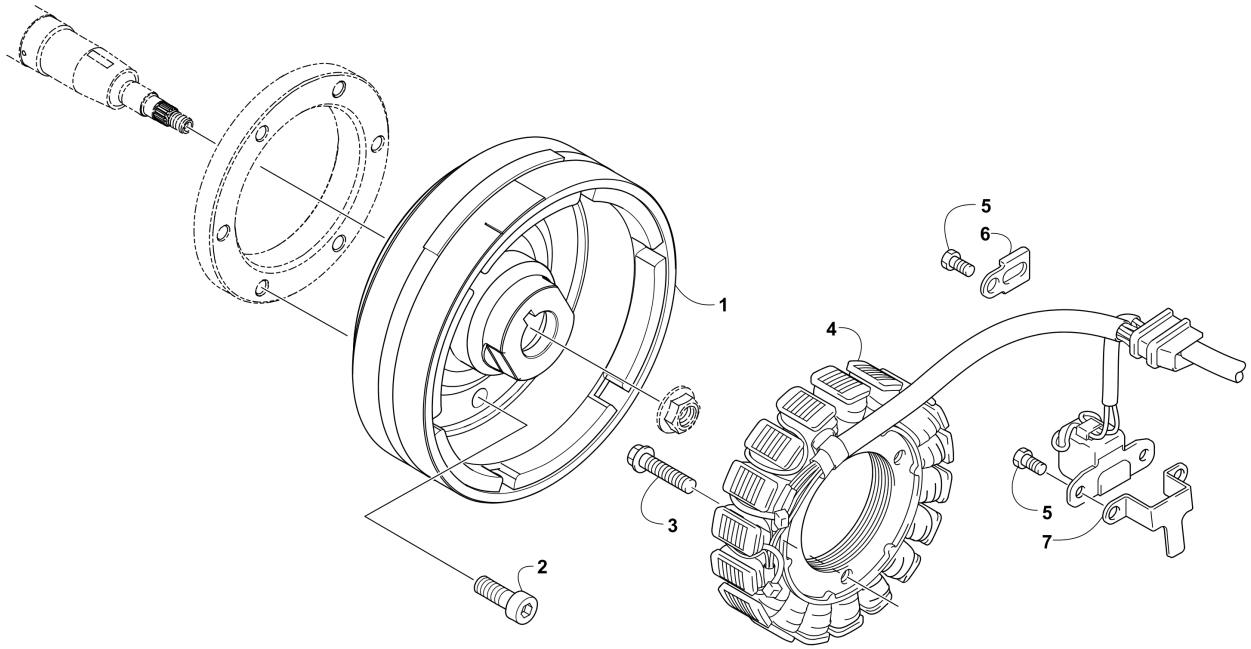

Item	Part No.	New Part	Qty	Name	Context	Footnote
1	0802-057		1	Rotor/Flywheel		
2	0826-120		6	Screw, Cap		
3	3307-116		3	Screw, Cap		
4	3323-200		1	Stator, Ignition		
5	3307-059		3	Screw, Cap		
6	0802-003		1	Clamp, Routing		
7	0802-004		1	Clamp, Routing		

OIL PUMP AND STRAINER ASSEMBLY [301455]

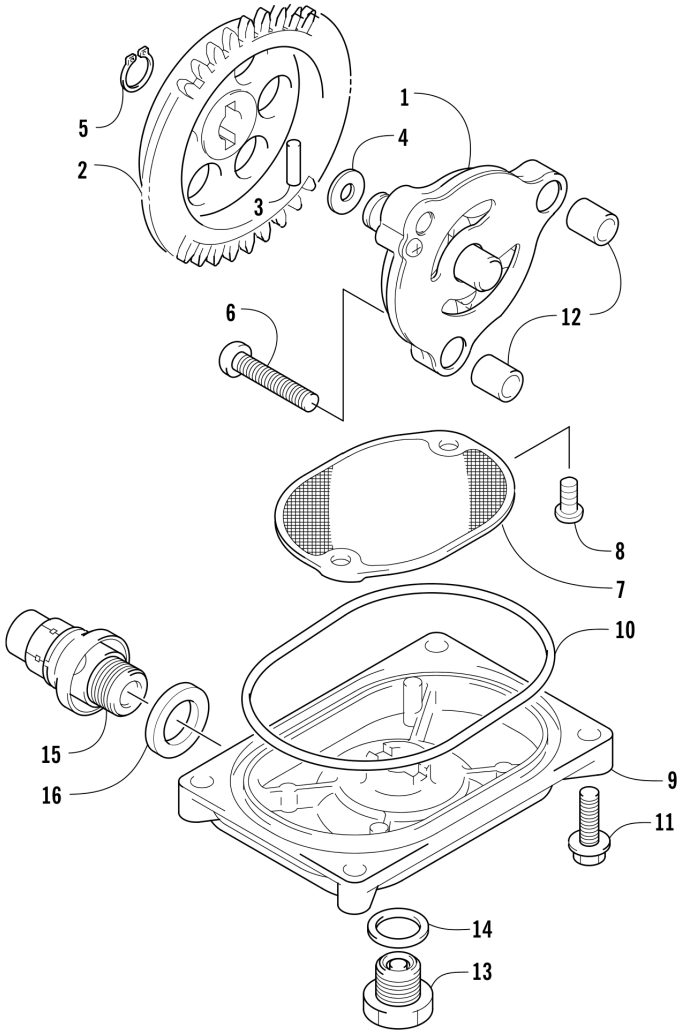

Item	Part No.	New Part	Qty	Name	Context	Footnote
1	0812-069		1	Pump, Oil		
2	0812-010		1	Gear, Driven		
3	0812-036		1	Pin, Driven Gear		
4	0828-007		1	Washer		
5	3304-146		1	Ring, Retaining		
6	3307-063		3	Screw, Machine		
7	0812-049		1	Strainer, Oil		
8	3307-047		2	Screw, Cap		
9	0812-038		1	Cap, Oil Strainer		
10	0830-159		1	O-Ring		
11	3307-050		4	Screw, Cap		
12	0829-033		2	Pin, Dowel		
13	0812-065		1	Plug, Drain		
14	0830-143		1	Washer, Compression - 14 x 19 x 1.35		
15	0812-067		1	Valve, Oil-Relief - Assembly	(inc. 16)	

Item	Part No.	New Part	Qty	Name	Context	Footnote
16	0830-181		1	O-Ring		

REAR BODY, RACK, AND TAILLIGHT ASSEMBLY [302342]

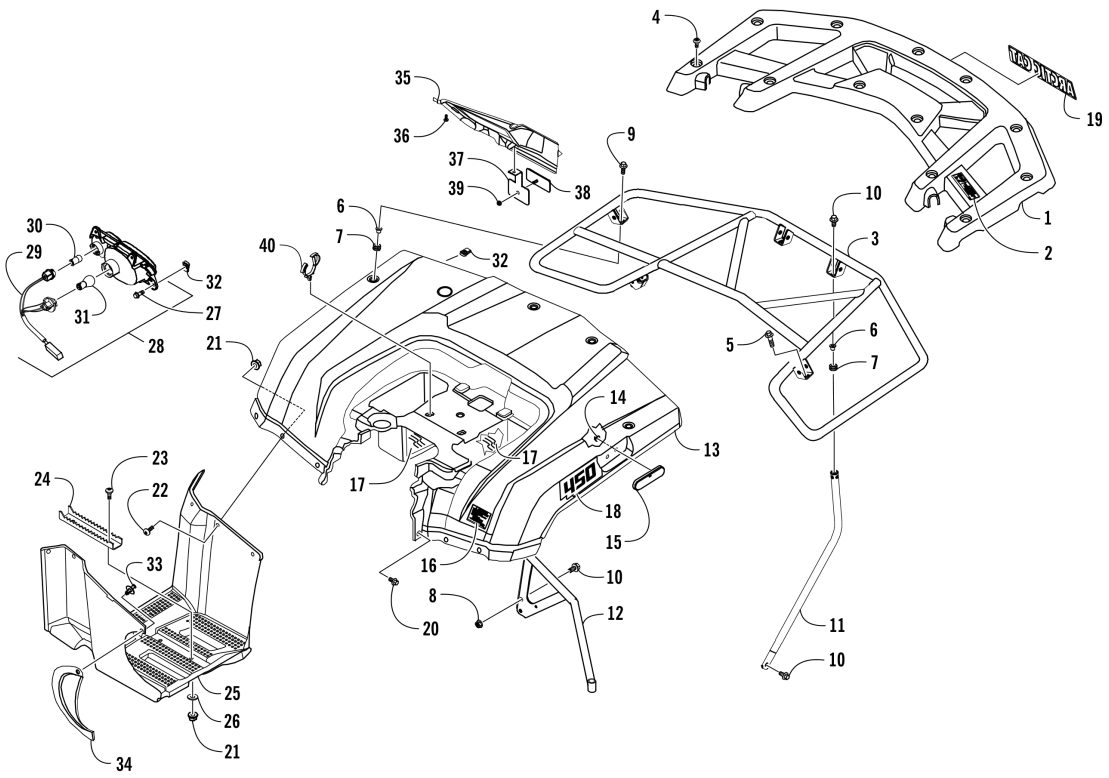

Item	Part No.	New Part	Qty	Name	Context	Footnote
1	3307-190		1	Panel, Rack - Rear - Assembly	(inc. 2)	
2	1411-682		1	Decal, Warning - Load		
3	3307-183		1	Rack, Rear		
4	3304-650		12	Screw, Self-Tapping		
5	8410-830		2	Screw, Cap		
6	0423-669		4	Spacer		
7	0423-465		4	Grommet		
8	3304-668		8	Nut, Lock		
9	3313-522		2	Screw, Cap		
10	3304-543		8	Screw, Cap		
11	3307-184		2	Tube, Mounting		
12	3307-185		1	Bracket, Mounting - Rear Rack		
13	3307-155		1	Panel, Fender - Rear - Green		
14	3304-774		2	Nut		
15	3313-359		2	Reflector - Front		
16	5411-998		1	Decal, Warning - Tire Pressure		
17	3307-158		1	Foil, Protective - Right		
17	3307-159		1	Foil, Protective - Left		
18	6411-024		1	Decal, "450" - Right - Green		
18	6411-025		1	Decal, "450" - Left - Green		

Item	Part No.	New Part	Qty	Name	Context	Footnote
19	5411-392		1	Decal, Arctic Cat		
20	3305-783		2	Screw, Cap		
21	3304-431		22	Nut, Lock		
22	3305-703		18	Screw, Machine		
23	3304-586		4	Screw, Cap		
24	5506-497		2	Footpeg - Black		
25	3307-160		1	Footwell - Rear - Right		
25	3307-161		1	Footwell - Rear - Left		
26	3305-852		4	Washer		
27	3304-029		8	Bolt, Washer - 5 x 16		
28	3307-846		1	Taillight Assembly - Right	(inc. 29-31)	
28	3307-847		1	Taillight Assembly - Left	(inc. 29-31)	
29	3307-668		1	Socket Assembly - Right		
29	3307-669		1	Socket Assembly - Left		
30	3304-825		2	Bulb		
31	3303-849		2	Bulb, Taillight		
32	3304-061		20	Nut Clip 5 mm		
33	3305-448		1	Clip, Retaining		
34	3307-168		1	Panel		
35	3307-166		1	Cover, Taillight - Right		
35	3307-167		1	Cover, Taillight - Left		
36	3304-645		8	Screw, Self-Tapping - 5 x 12		
37	3307-665		2	Bracket, Reflector		
38	3304-737		2	Reflector, Rear Red		
39	3305-527		2	Nut, Flange		
40	3307-152		2	Clip		

REAR DRIVE GEARCASE ASSEMBLY [97672]

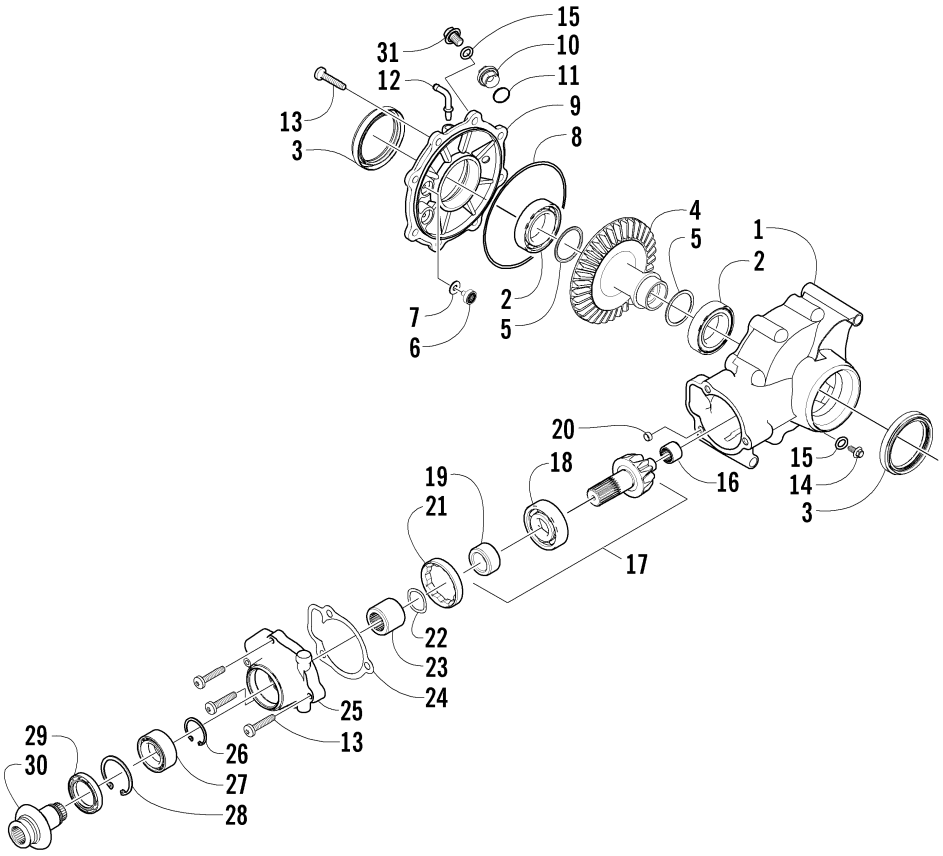

Item	Part No.	New Part	Qty	Name	Context	Footnote
Not Shown	3306-023		1	Gearcase, Rear		
1	3306-024		1	Housing, Gearcase		
2	3306-801		2	Bearing		
3	3306-025		2	Seal		
4	3306-029		1	Gear, Ring - 34T		
5	3306-132		AR	Shim, 41 x 49 x 1.0 mm		
5	3306-133		AR	Shim, 41 x 49 x 1.1 mm		
5	3306-134		AR	Shim, 41 x 49 x 1.2 mm		
5	3306-135		AR	Shim, 41 x 49 x 1.3 mm		
5	3306-136		AR	Shim, 41 x 49 x 1.4 mm		
5	3306-137		AR	Shim, 41 x 49 x 1.5 mm		
5	3306-138		AR	Shim, 41 x 49 x 1.6 mm		
5	3306-139		AR	Shim, 41 x 49 x 1.7 mm		
6	3306-031		1	Button, Thrust		
7	3306-124		AR	Shim, 6.3 x 18 x 1.0 mm		
7	3306-125		AR	Shim, 6.3 x 18 x 1.1 mm		
7	3306-126		AR	Shim, 6.3 x 18 x 1.2 mm		
7	3306-127		AR	Shim, 6.3 x 18 x 1.3 mm		
7	3306-128		AR	Shim, 6.3 x 18 x 1.4 mm		
7	3306-129		AR	Shim, 6.3 x 18 x 1.5 mm		

Item	Part No.	New Part	Qty	Name	Context	Footnote
7	3306-130		AR	Shim, 6.3 x 18 x 1.6 mm		
7	3306-131		AR	Shim, 6.3 x 18 x 1.7 mm		
8	3306-030		1	O-Ring		
9	3306-033		1	Cover, Gearcase		
10	3306-035		1	Plug, Fill	(inc. 11)	
11	0423-154		1	O-Ring		
12	3306-034		1	Fitting, Elbow		
13	3303-615		11	Screw, Self-Tapping		
14	3306-027		1	Plug, Magnetic	(inc. one No. 15)	
15	0423-153		2	O-Ring		
16	3306-038		1	Bearing		
17	3306-039		1	Gear, Pinion - Assembly - 11T	(inc. 18-19)	
18	3306-040		1	Bearing		
19	0402-336		1	Collar, Retaining		
20	3306-048		1	Pin, Dowel		
21	3306-042		1	Collar, Lock		
22	3306-043		1	Washer, Wave		
23	3306-044		1	Collar, Shaft		
24	3323-234		1	Gasket, Flange		
25	3306-049		1	Housing, Pinion		
26	3306-045		1	Ring, Retaining		
27	3323-240		1	Bearing		
28	3306-046		1	Ring, Retaining		
29	3323-239		1	Seal		
30	3306-047		1	Shaft, Input		
31	3306-036		1	Plug, Oil Level	(inc. one No. 15)	

REAR SUSPENSION ASSEMBLY [301925]

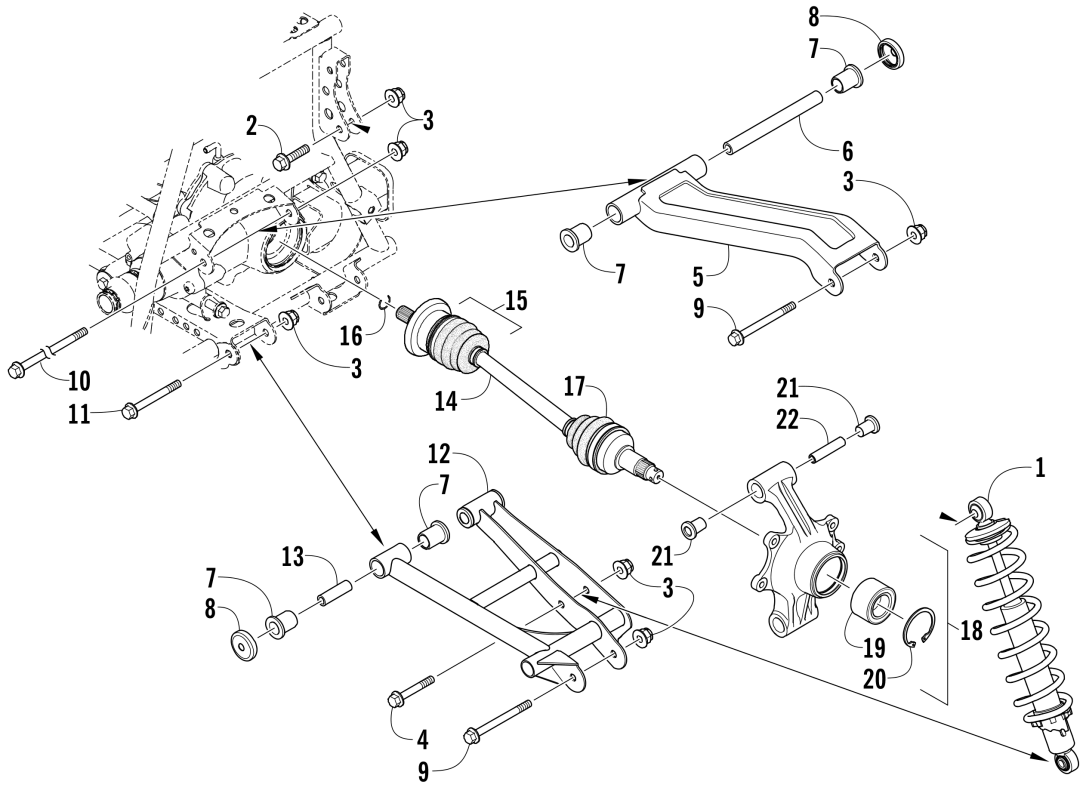

Item	Part No.	New Part	Qty	Name	Context	Footnote
1	3307-769		2	Shock/Spring Assembly - White		
2	3307-068		2	Screw, Cap		
3	3304-031		14	Nut, Lock		
4	3307-070		2	Screw, Cap		
5	3306-872		1	A-Arm, Upper Right - Black	(inc. 6-8)	
5	3306-873		1	A-Arm, Upper Left - Black	(inc. 6-8)	
6	3313-111		2	Sleeve, Suspension		
7	3313-112		12	Bushing		
8	3313-113		12	Seal		
9	3323-188		4	Screw, Cap		
10	3313-430		2	Screw, Cap		
11	3304-183		4	Screw, Cap		
12	3313-136		1	A-Arm, Lower Right - Black	(inc. 7-8 and 13)	
12	3313-137		1	A-Arm, Lower - Left	(inc. 7-8 and 13)	
13	3313-107		4	Axle		
14	3313-832		2	Axle, Drive	(inc. 15-17)	
15	3313-560		2	Service Kit, Differential Side Boot (In Board)	(inc. 16)	
16	0423-845		2	Clip, Retaining - Inboard		
17	3306-425		2	Repair Kit, Boot - Drive Axle - Outbound		
18	3323-108		1	Knuckle - Assembly	(inc. 19-22)	

Item	Part No.	New Part	Qty	Name	Context	Footnote
18	3323-109		1	Knuckle - Assembly	(inc. 19-22)	
19	1402-809		2	Bearing		
20	0423-423		2	Ring, Retaining		
21	0403-283		8	Bushing		
22	0403-213		4	Axle		

SEAT ASSEMBLY [301363]

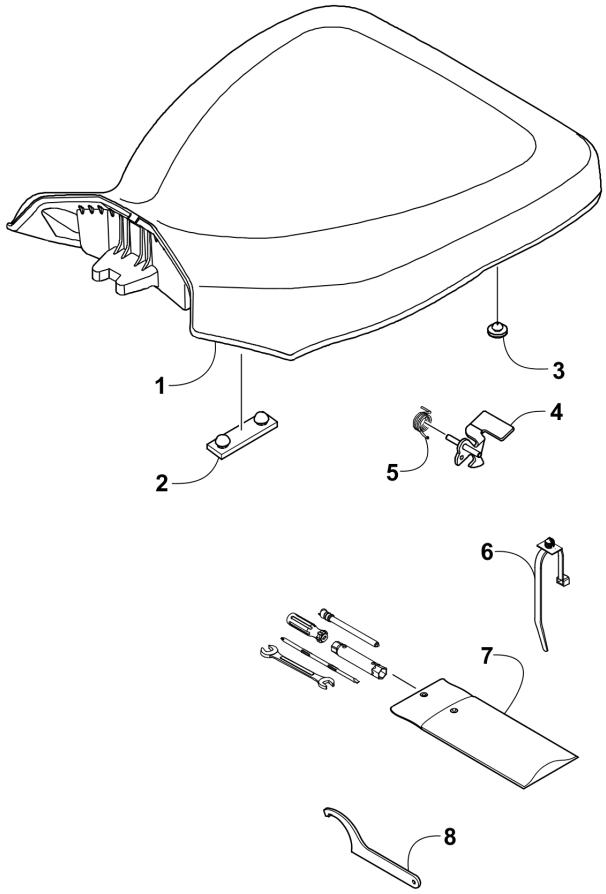

Item	Part No.	New Part	Qty	Name	Context	Footnote
1	3307-147		1	Seat Assembly	(inc. 2-5)	
2	3306-673		1	Bumper, Seat		
3	3306-458		6	Bumper, Seat		
4	1506-156		1	Latch, Seat		
5	1406-592		1	Spring, Latch		
6	3307-148		1	Retainer, Tool Kit		
7	3305-913		1	Kit, Tool		
8	1441-797		1	Wrench, Spanner		Optional

SECONDARY DRIVE ASSEMBLY [94327]

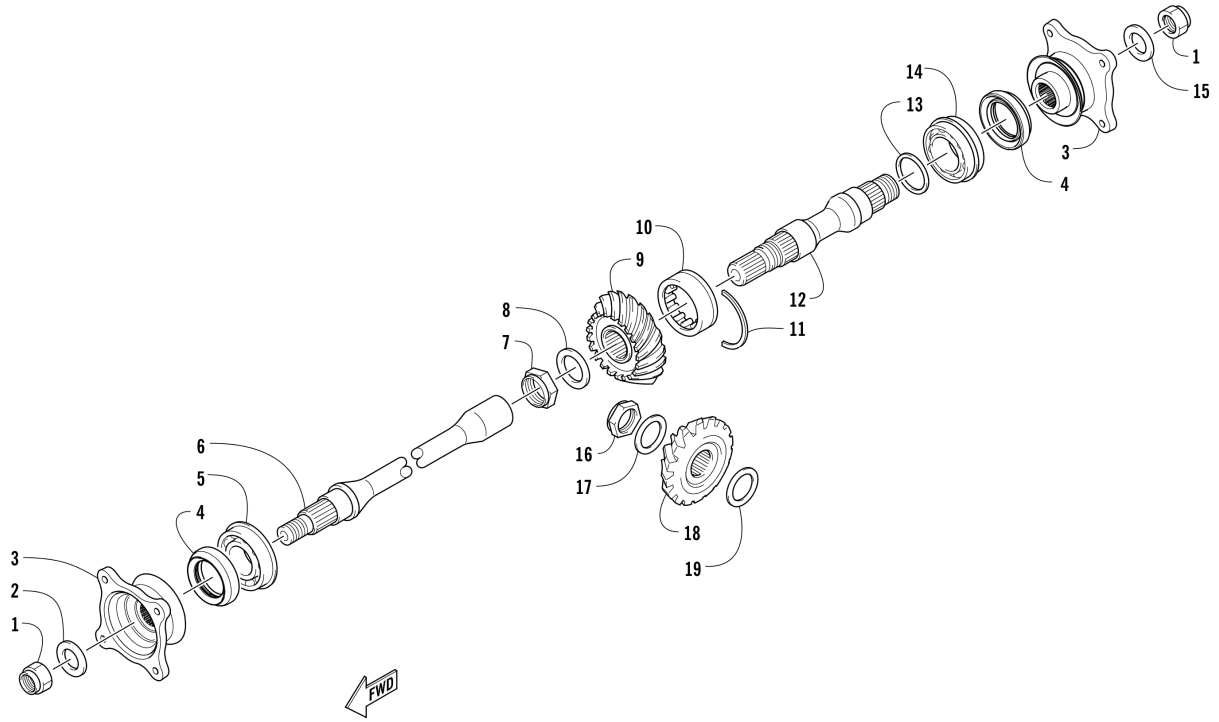

Item	Part No.	New Part	Qty	Name	Context	Footnote
1	3306-428		2	Nut		
2	3304-958		1	Washer		
3	0819-022		2	Flange, Output Joint		
4	0830-144		2	Seal, Oil		
5	0832-026		1	Bearing		
6	0819-020		1	Shaft, Secondary Driven		
7	0827-022		1	Nut		
8	0828-090		1	Washer		
9	0819-019		1	Gear, Secondary Driven		
10	0832-040		1	Bearing		
11	0819-070		1	C-Ring		
12	0819-021		1	Shaft, Secondary Driven		
13	3305-955		AR	Shim, 25 x 34 x 0.60 mm		
13	3305-956		AR	Shim, 25 x 34 x 0.65 mm		
13	3305-957		AR	Shim, 25 x 34 x 0.70 mm		
13	3305-958		AR	Shim, 25 x 34 x 0.75 mm		
13	3305-959		AR	Shim, 25 x 34 x 0.80 mm		
13	3305-960		AR	Shim, 25 x 34 x 0.85 mm		
13	3305-961		AR	Shim, 25 x 34 x 0.90 mm		

Item	Part No.	New Part	Qty	Name	Context	Footnote
13	3305-962		AR	Shim, 25 x 34 x 0.95 mm		
13	3305-963		AR	Shim, 25 x 34 x 1.00 mm		
13	3305-964		AR	Shim, 25 x 34 x 1.05 mm		
13	3305-965		AR	Shim, 25 x 34 x 1.10 mm		
13	0828-088		AR	Shim, 25 x 34 x 1.15 mm		
13	3305-966		AR	Shim, 25 x 34 x 1.20 mm		
13	3305-967		AR	Shim, 25 x 34 x 1.25 mm		
14	0832-041		1	Bearing		
15	3306-226		1	Washer		
16	0827-047		1	Nut		
17	3304-042		1	Washer, Thrust		
18	0819-018		1	Gear, Secondary Drive		
19	3306-009		AR	Shim, 30 x 48 x 0.60 mm		
19	3306-010		AR	Shim, 30 x 48 x 0.65 mm		
19	3306-011		AR	Shim, 30 x 48 x 0.70 mm		
19	3306-012		AR	Shim, 30 x 48 x 0.75 mm		
19	3306-013		AR	Shim, 30 x 48 x 0.80 mm		
19	3306-014		AR	Shim, 30 x 48 x 0.85 mm		
19	3306-015		AR	Shim, 30 x 48 x 0.90 mm		
19	3306-016		AR	Shim, 30 x 48 x 0.95 mm		
19	3306-017		AR	Shim, 30 x 48 x 1.00 mm		
19	3306-018		AR	Shim, 30 x 48 x 1.05 mm		
19	3306-019		AR	Shim, 30 x 48 x 1.10 mm		
19	3306-020		AR	Shim, 30 x 48 x 1.15 mm		
19	3306-021		AR	Shim, 30 x 48 x 1.20 mm		
19	3306-022		AR	Shim, 30 x 48 x 1.25 mm		

SECONDARY TRANSMISSION ASSEMBLY [301457]

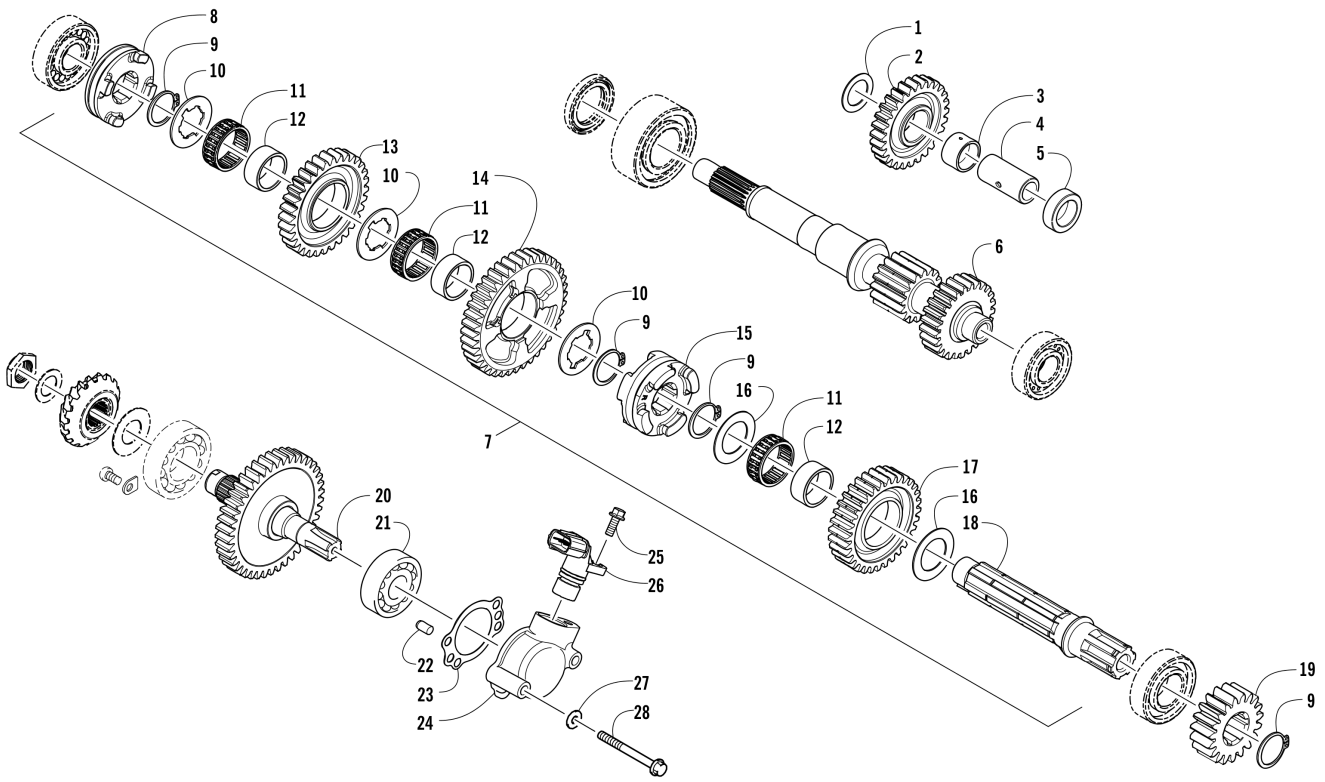

Item	Part No.	New Part	Qty	Name	Context	Footnote
1	0828-081		1	Washer, Thrust		
2	0822-061		1	Gear, Reverse Idle		
3	0822-065		1	Bushing		
4	0822-064		1	Shaft, Reverse Idle		
5	0822-029		1	Spacer		
6	0822-128		1	Driveshaft		
7	0822-129		1	Countershaft Assembly	(inc. 8-18)	
8	0822-033		1	Gear Select, Reverse		
9	3304-147		4	Circlip, External - 25 mm		
10	3304-045		3	Washer		
11	0832-038		3	Bearing		
12	0822-062		3	Bushing		
13	0822-032		1	Gear, Reverse Driven		
14	0822-063		1	Gear, Driven - Low		
15	0822-027		1	Gear Select, Sliding		
16	3304-044		2	Washer, Thrust - 25 mm		
17	0818-119		1	Gear, Driven - High		
18	0822-025		1	Countershaft		
19	0822-028		1	Gear, Drive		
20	0822-023		1	Shaft, Output		

Item	Part No.	New Part	Qty	Name	Context	Footnote
21	3304-198		1	Bearing		
22	3303-395		2	Pin, Dowel		
23	0830-156		1	Gasket, Housing		
24	0822-105		1	Housing, Speedometer Sensor		
25	3307-061		1	Screw, Cap		
26	3313-172		1	Sensor, Speedometer		
27	0830-155		2	Gasket		
28	3307-051		2	Screw, Cap		

SHIFT LEVER ASSEMBLY [301366]

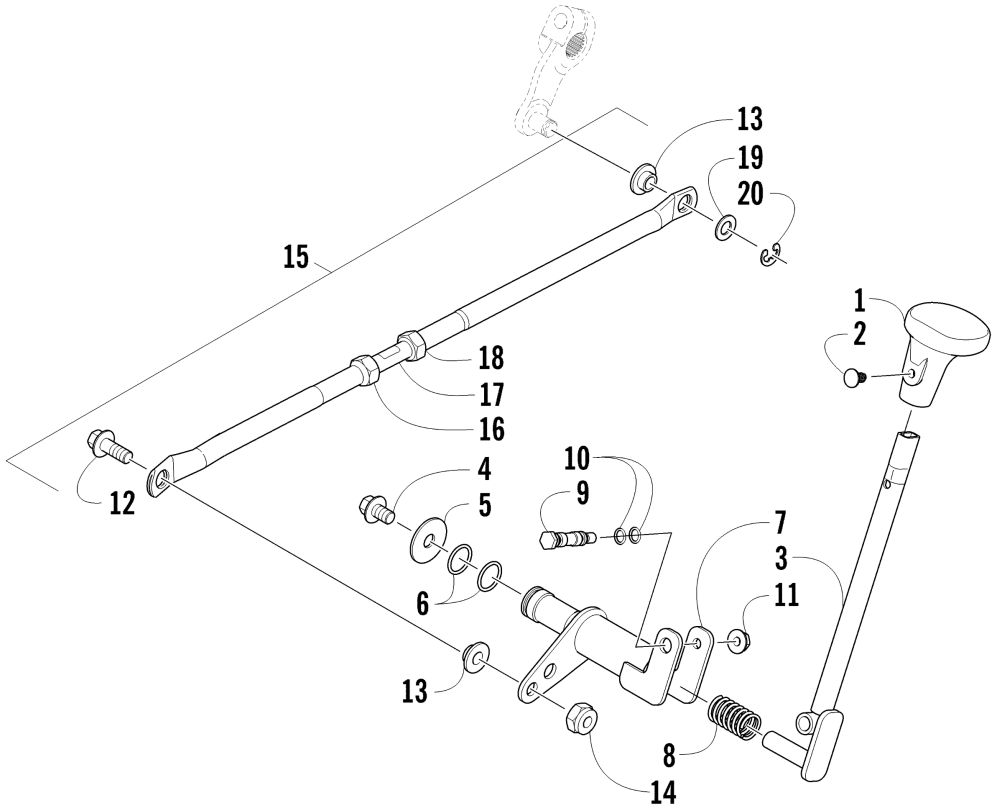

Item	Part No.	New Part	Qty	Name	Context	Footnote
1	0402-843		1	Knob, Shift		
2	0423-345		1	Clip, Push		
3	3307-170		1	Lever, Shift		
4	3304-544		1	Screw, Cap		
5	0423-087		1	Washer		
6	0423-299		2	O-Ring - 016 (5/8 x 3/4 x 1/16)		
7	3306-317		1	Actuator, Shift		
8	0402-678		1	Spring, Shift Lever		
9	0402-675		1	Axle, Pivot		
10	0423-182		2	O-Ring		
11	3304-654		1	Nut, Lock		
12	3313-821		1	Screw, Cap		
13	3323-037		2	Bushing		
14	3305-396		1	Nut, Lock		
15	3306-319		1	Linkage, Shift - Assembly	(inc. 16-18)	
16	3303-327		1	Nut, Hex - Right-Hand Thread		
17	3313-278		1	Adjuster, Shift Linkage		
18	3313-822		1	Nut, Hex - Left-Hand Thread		
19	3304-138		1	Washer		
20	3313-766		1	E-Ring		

STARTER CLUTCH ASSEMBLY [92888]

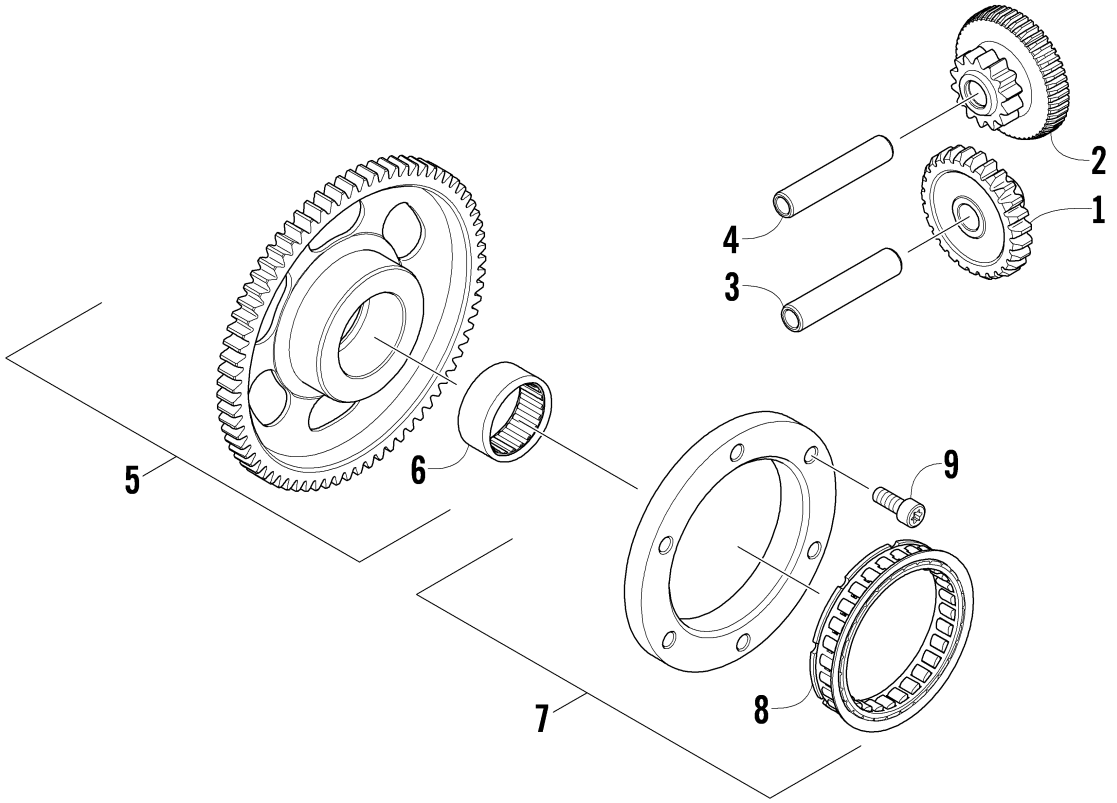

Item	Part No.	New Part	Qty	Name	Context	Footnote
1	0815-022		1	Gear, Starter Idler - No. 2		
2	0815-031		1	Gear, Starter Idler - No. 1		
3	0815-015		1	Pin, Starter Idler Gear No. 2		
4	0815-007		1	Pin, Starter Idler Gear No. 1		
5	0815-023		1	Gear, Starter Clutch	(inc. 6)	
6	0832-069		1	Bearing		
7	0802-044		1	Clutch, One-Way w/Hub - Assembly	(inc. 8)	
8			1	Bearing		Not a Service Part
9	0826-120		6	Screw, Cap		

STEERING ASSEMBLY [300613]

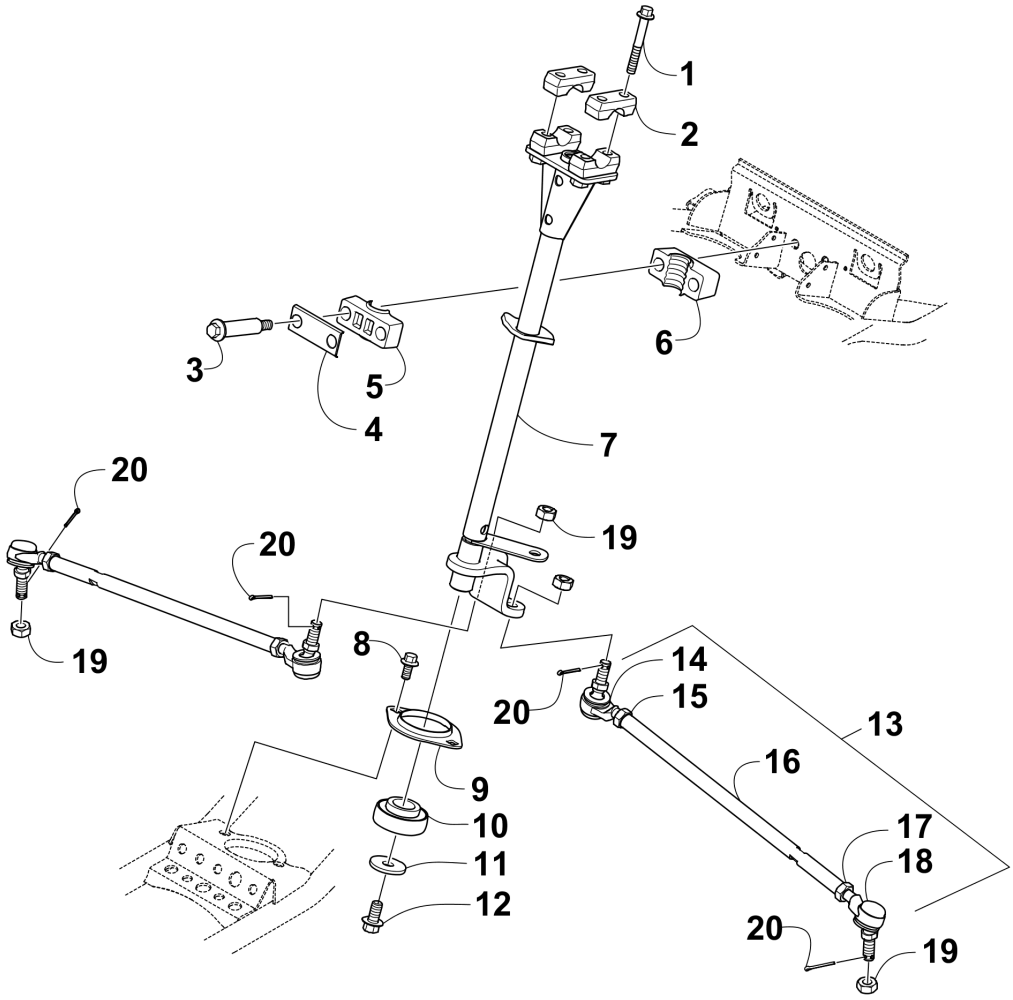

Item	Part No.	New Part	Qty	Name	Context	Footnote
1	3307-066		4	Screw, Cap		
2	0405-035		2	Cap, Steering Adjuster		
3	0423-505		2	Screw, Shoulder		
4	0405-166		1	Cap, Housing		
5	3323-052		1	Block, Mounting	Front	
6	3323-051		1	Block, Mounting	Rear	
7	3313-583		1	Post, Steering		
8	3304-565		2	Bolt, Flange - 8 x 20		
9	0602-233		1	Flange, Bearing		
10	0405-052		1	Bearing w/Inverted Oil Seal		
11	0423-073		1	Washer		
12	8408-820		1	Screw, Cap		
13	3306-722		2	Tie Rod - Assembly	(inc. 14-18)	
14	3306-725		2	End, Tie Rod - Left-Hand Thread		
15	3306-727		2	Nut - Left-Hand Thread		

Item	Part No.	New Part	Qty	Name	Context	Footnote
16	3306-723		2	Tie Rod		
17	3306-726		2	Nut - Right-Hand Thread		
18	3306-724		2	End, Tie Rod - Right-Hand Thread		
19	3306-290		4	Nut		
20	3305-724		4	Pin, Cotter		

THROTTLE BODY ASSEMBLY [302352]

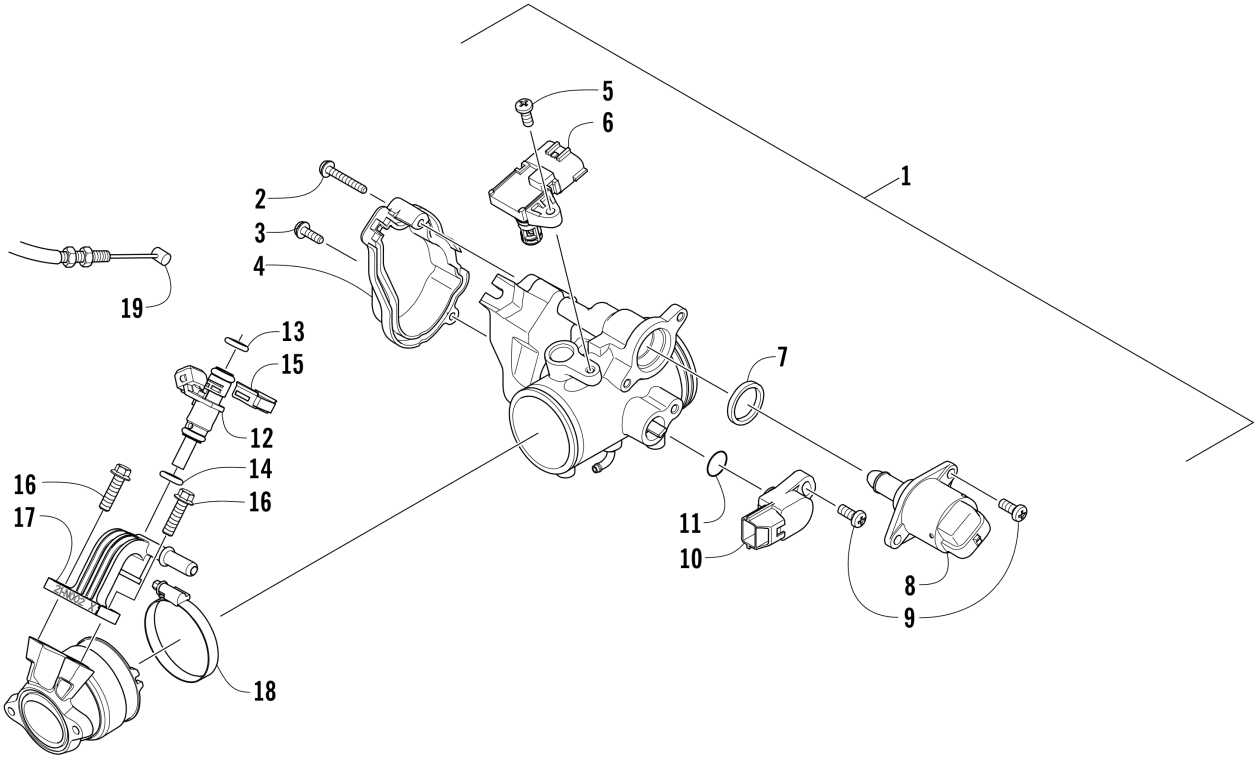

Item	Part No.	New Part	Qty	Name	Context	Footnote
1	3307-878		1	Throttle Body - Assembly	(inc. 2-11)	
2	3306-267		1	Screw, Machine		
3	3306-266		1	Screw, Machine		
4	0824-060		1	Cover		
5	3307-081		1	Screw, Machine		
6	0824-052		1	Sensor, T-MAP		
7	0832-088		1	Seal		
8	0824-054		1	Valve, Idle Speed Control		
9	3306-967		3	Screw, Machine		
10	0824-053		1	Sensor, Throttle Position	(inc. 11)	
11	3306-150		1	O-Ring		
12	0470-884		1	Injector, Fuel		
13	3307-074		1	O-Ring - A		
14	3307-075		1	O-Ring - B		
15	3306-253		1	Clip, Retaining		
16	3305-344		2	Screw, Cap		
17	3307-073		1	Rail, Fuel		
18	3306-250		1	Clamp		
19	3306-275		1	Cable, Throttle		

TRANSMISSION ASSEMBLY [301456]

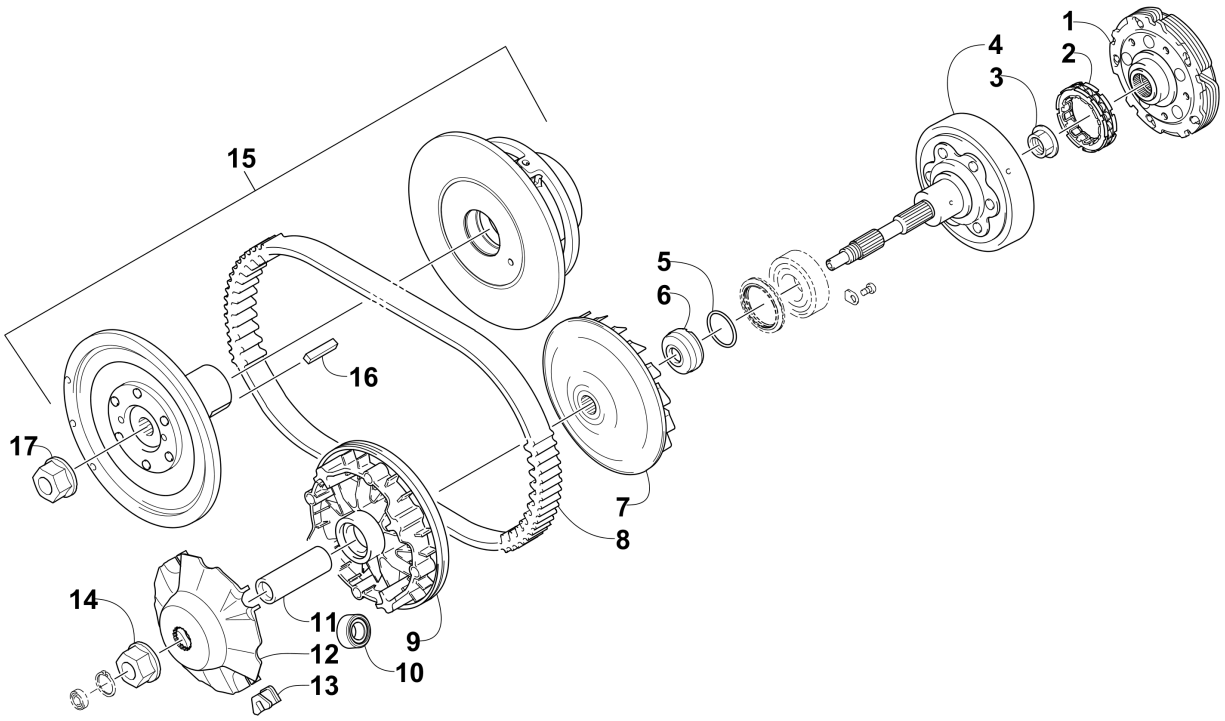

Item	Part No.	New Part	Qty	Name	Context	Footnote
1	0823-328		1	Shoe, Clutch - Assembly		
2	0823-198		1	Clutch, One-Way		
3	0827-050		1	Nut		
4	0823-338		1	Housing, Clutch		
5	0830-187		1	O-Ring		
6	0823-058		1	Spacer		
7	0823-313		1	Face, Fixed Drive		
8	0823-228		1	Belt, Drive		
9	0823-324		1	Face, Movable Drive		
10	0823-351		8	Roller, Movable Drive Face		
11	0823-206		1	Spacer, Movable Drive Face		
12	0823-213		1	Plate, Movable Drive Face		
13	0823-214		4	Damper, Movable Drive Face		
14	3323-165		1	Nut, Flange - 16 mm		
15	0823-350		1	Clutch, Driven - Assembly	(inc. 16)	
16	0835-018		1	Key		
17	0827-058		1	Nut		

WATER PUMP ASSEMBLY [301459]

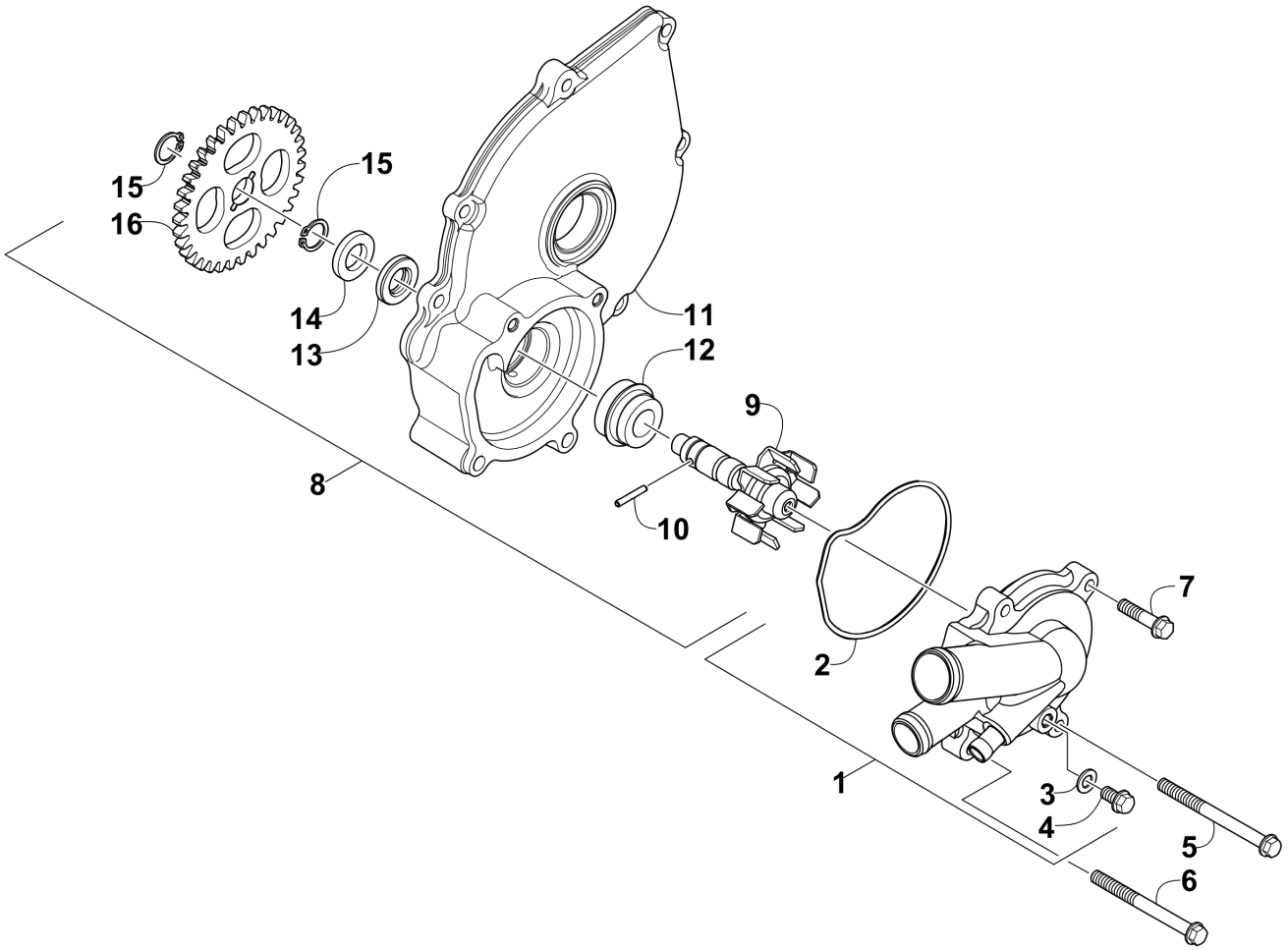

Item	Part No.	New Part	Qty	Name	Context	Footnote
1	0813-054		1	Cover, Water Pump - Assembly	(inc. 2-4)	
2	0830-208		1	O-Ring		
3	3304-049		1	Washer		
4	3304-186		1	Screw, Cap		
5	3307-052		1	Screw, Cap		
6	0826-151		1	Screw, Cap		
7	3307-050		2	Screw, Cap		
8	0813-051		1	Housing, Water Pump - Assembly	(inc. 9-16)	
9	0813-057		1	Shaft, Impeller - Assembly		
10	0829-057		1	Pin, Alignment		
11	0806-123		1	Housing, Water Pump		
12	3305-940		1	Seal, Mechanical		
13	0830-207		1	Seal, Oil		
14	0828-130		1	Washer, Thrust		
15	0831-089		2	Circlip		

Item	Part No.	New Part	Qty	Name	Context	Footnote
16	0811-037		1	Gear, Driven		

WHEEL AND TIRE ASSEMBLY [302345]

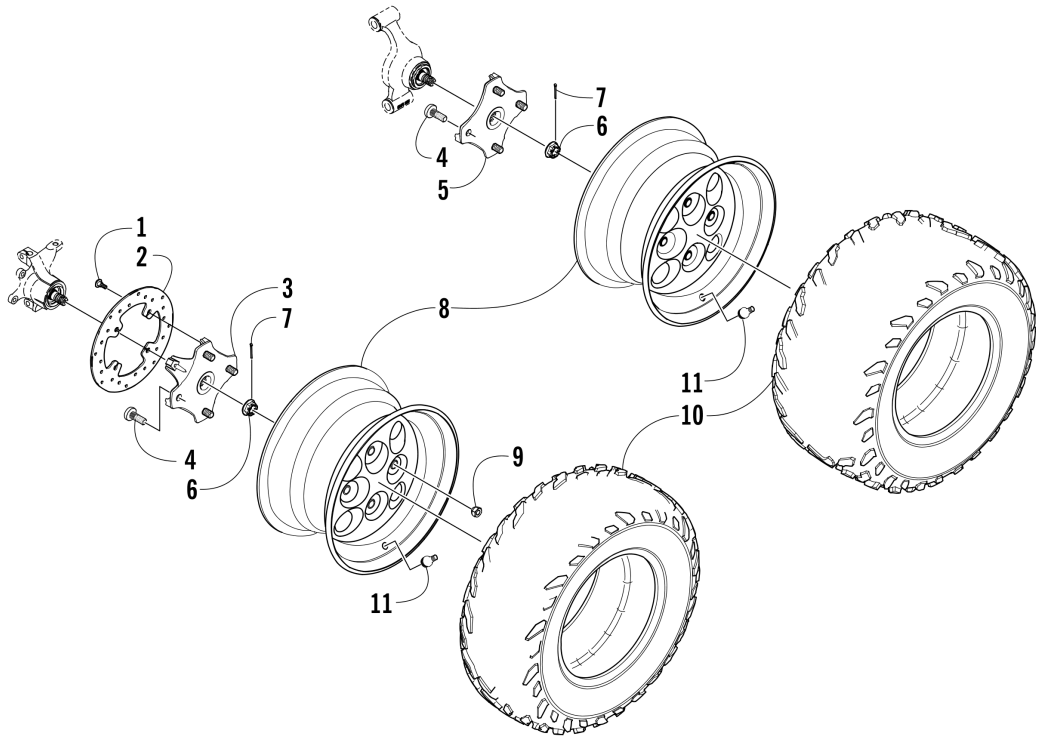

Item	Part No.	New Part	Qty	Name	Context	Footnote
1	0423-557		12	Screw, Shoulder		
2	1436-806		3	Kit, Brake Disc	(inc. 1)	
3	1502-462		3	Hub, Wheel	(inc. 4) (Both Front and Right Rear)	
4	0402-974		16	Stud		
5	1502-464		1	Hub, Wheel	(inc. 4) (Left Rear)	
6	0423-607		4	Nut, Castle		
7	0423-407		4	Pin, Cotter		
8	3307-770		4	Wheel		
9	0423-408		16	Nut, Lug		
10	3306-354		2	Tire - Front		
10	3306-355		2	Tire - Rear		
11	3303-887		4	Stem, Valve		

WINCH ASSEMBLY [300583]

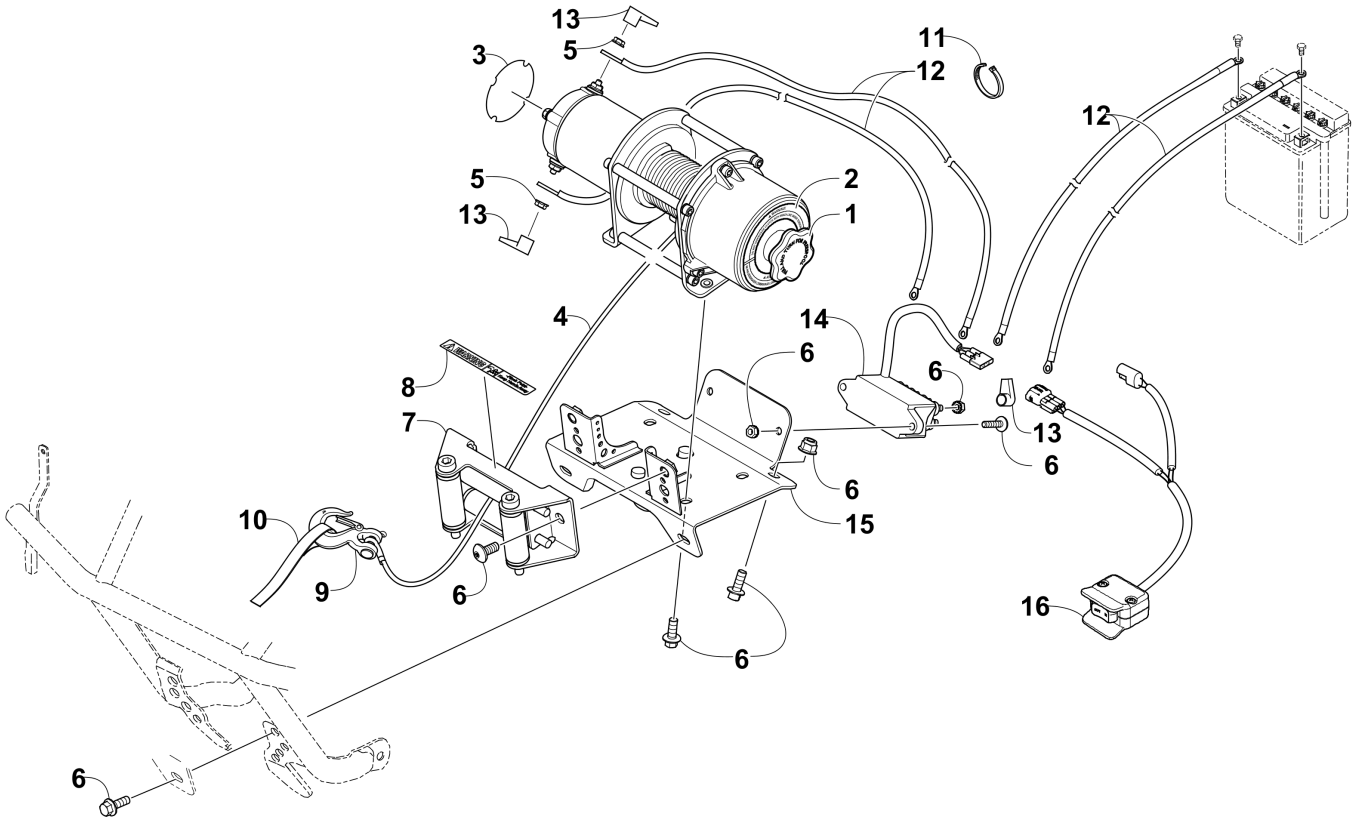

Item	Part No.	New Part	Qty	Name	Context	Footnote
1	2441-250		1	Winch, Arctic 3000	(inc. 2-5)	
2	2411-141		1	Decal, Warning - Tension		
3	2411-140		1	Decal, Warning - Operation		
4	1441-831		1	Cable, Winch		
5	0623-038		2	Nut w/Washer		
6	1441-862		1	Kit, Hardware		
7	0441-403		1	Roller, Winch	(inc. 8)	
8	0411-474		1	Decal, Warning - Pinch Point		
9	3306-383		1	Hook, Winch	(inc. 10)	
10	3306-385		1	Strap		
11	0123-788		AR	Tie, Cable - 8 in.		
11	0123-903		AR	Tie, Cable - 11.5 in.		
12	3306-382		1	Set, Winch Cable		
13	3306-638		1	Kit, Terminal Boot		
14	0409-066		1	Solenoid		
15	0541-622		1	Plate, Mounting - Winch		
16	3306-644		1	Switch, Winch - Assembly		

WIRING HARNESS ASSEMBLY [302350]

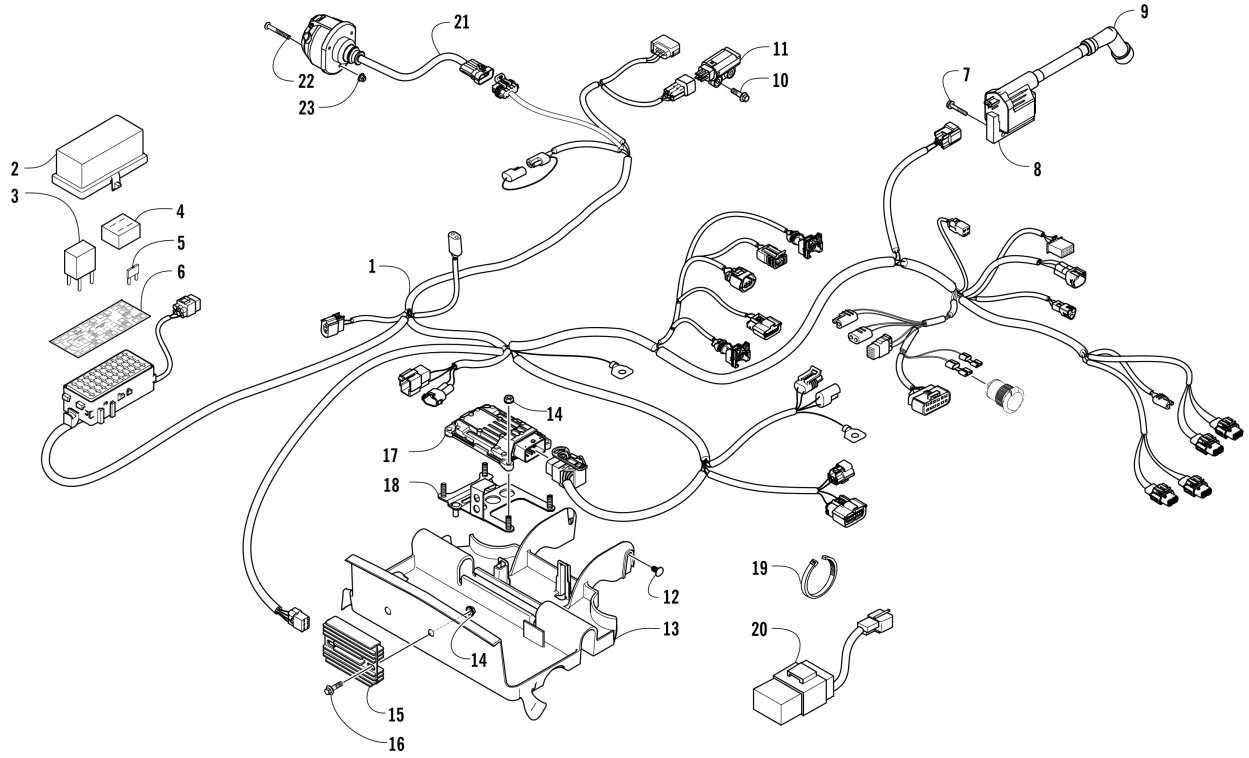

Item	Part No.	New Part	Qty	Name	Context	Footnote
1	3307-860		1	Harness, Main	(inc. 2-6)	
2	0530-008		1	Cover, Fuse Block		
3	0430-033		4	Relay (5-pin) 30 amp	(5-Pin) (30 Amp)	
4	0430-037		1	Holder, Fuse		
5	0430-032		7	Fuse - 10 Amp		
5	0430-031		4	Fuse - 15 Amp		
5	3304-212		2	Fuse - 30 Amp		
6	3306-816		1	Decal, Fuse Block		
7	3306-326		2	Screw, Cap		
8	0824-073		1	Coil, Ignition - Assembly (w/Cap)	(inc. 9)	
9	0824-056		1	Cap, Spark Plug		
10	3306-327		2	Screw, Cap		
11	3306-325		1	Sensor, Tilt		
12	0423-345		2	Clip, Push		
13	3306-281		1	Tray, Electrical		
14	3304-654		6	Nut, Lock		
15	3306-413		1	Regulator, Voltage		
16	3305-344		2	Screw, Cap		
17	0530-210		1	ECM		
18	3306-304		1	Bracket, Mounting - ECM		

Item	Part No.	New Part	Qty	Name	Context	Footnote
19	3303-289		AR	Tie, Cable		
20	3304-778		1	Control, Hazard		
21	3307-843		1	Harness, Trailer		
22	3307-858		3	Bolt w/Washer		
23	3305-527		3	Nut, Flange		

The illustrations used in this Parts Manual are for reference to replacement part numbers only and are not to be used for assembly. For assembly procedures, use an Arctic Cat Service Manual. For a complete list of related items, refer to the current accessory catalog. Once printed, Arctic Cat does not guarantee the accuracy of the information contained in this manual. Our parts lists and illustrations are constantly revised to reflect part number changes, discrepancies, and enhancements.

®™ Trademarks of Arctic Cat Inc., Thief River Falls, MN 56701