ATV
Illustrated Parts Manual

500 TRV

(Automatic Transmission)

Model Number	A2004TDM4BUSR	(Red)
Model Number	A2004TDM4BUSG	(Green)
Model Number	A2004TDM4BUSZ	(Cat Green)

Homologated ATV´s

ATV04-500i-4x4A-TRV (Red)

ATV04-500i-4x4A-TRV (Green)

ATV04-500i-4x4A-TRV (Cat Green)

ARCTIC CAT®

2004

TABLE OF CONTENTS

2004 500 TRV

Red - (Model No. A2004TDM4BUSR) Green - (Model No. A2004TDM4BUSG)
Cat Green - (Model No. A2004TDM4BUSZ)

FRONT BODY PANEL ASSEMBLY 1
REAR BODY PANEL ASSEMBLY. 2
TAILLIGHT ASSEMBLY 3
DECALS 4
FRAME AND RELATED PARTS 5
SEAT ASSEMBLY 6
STEERING ASSEMBLY 7
FRONT SUSPENSION ASSEMBLY 8
REAR SUSPENSION ASSEMBLY 9
WHEEL AND TIRE ASSEMBLY 10
AUXILIARY BRAKE ASSEMBLY 11
HYDRAULIC HAND BRAKE ASSEMBLY 12
HYDRAULIC BRAKE ASSEMBLY 13
GAS TANK ASSEMBLY 14
REVERSE SHIFT LEVER ASSEMBLY 15
AIR INTAKE ASSEMBLY 16
STORAGE BOX AND BATTERY ASSEMBLY 17
ENGINE AND EXHAUST 18
COOLING ASSEMBLY 19
CASE/BELT COOLING ASSEMBLY 20
FRONT DRIVE GEARCASE ASSEMBLY 21
REAR DRIVE GEARCASE ASSEMBLY 22
WIRING HARNESS ASSEMBLY 23
CARBURETOR 24
CYLINDER HEAD ASSEMBLY 25
CYLINDER ASSEMBLY 26
CRANKCASE ASSEMBLY 27
CLUTCH/V-BELT/MAGNETO COVER ASSEMBLY 28
CRANKSHAFT ASSEMBLY 29
STARTER CLUTCH ASSEMBLY 30
CRANK BALANCER ASSEMBLY 31
CAMSHAFT/VALVE ASSEMBLY 32
CAM CHAIN ASSEMBLY 33
RECOIL STARTER ASSEMBLY 34
OIL FILTER/PUMP ASSEMBLY 35
WATER PUMP ASSEMBLY 36
TRANSMISSION ASSEMBLY 37
SECONDARY TRANSMISSION ASSEMBLY 38
SECONDARY DRIVE ASSEMBLY 39
GEAR SHIFTING ASSEMBLY 40
STARTER MOTOR ASSEMBLY 41
MAGNETO ASSEMBLY 42
CONTROL SWITCH HOUSING ASSEMBLY 43
THROTTLE CASE ASSEMBLY 44
RELATED ITEMS . . . . . Back Cover

■ NOTE: The illustrations used in this Parts Manual are for reference to replacement part numbers only and are not to be used for assembly. For assembly procedures, use an Arctic Cat Service Manual. Underlined part numbers are new for the 2004 model year.

2003 Arctic Cat Inc.
®™ Trademarks of Arctic Cat Inc., Thief River Falls, MN 56701

Printed July 2003

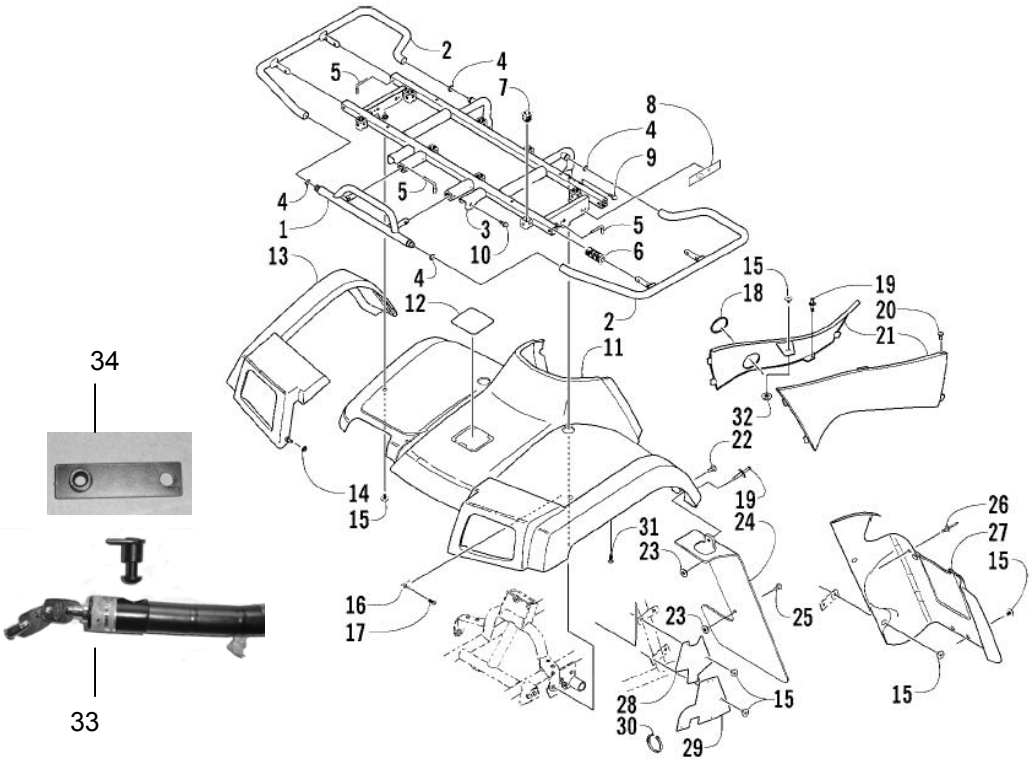

FRONT BODY PANEL ASSEMBLY

0738-633

Ref.	Part No.	Qty.	Description	Ref.	Part No.	Qty.	Description
1	0541-133	1	Center, Rack - Front	18	0470-404	1	Grommet, Fuel Shut-Off Valve
2	0541-134	2	Side, Rack - Front	19	0623-362	4	Rivet, Reinstallable
3	0541-135	1	Frame, Rack - Front	20	0623-309	2	Screw, Self-Tapping
4	0623-903	4	O-Ring	21	0506-548	1	Panel, Side - Right
5	0541-189	6	Pin		0506-243	1	Panel, Side - Left
6	0441-556	6	Bushing, Rack		0506-549	1	Panel, Side - Right (Green)
7	0441-592	8	Bushing, Rack		0506-673	1	Panel, Side - Left (Green)
8	0411-646	2	Decal, Reflector - Amber		0506-722	1	Panel, Side - Right (Cat Green)
9	0423-360	2	Screw, Cap		0506-723	1	Panel, Side - Left (Cat Green)
10	8408-816	2	Screw, Cap	22	0423-356	2	Screw, Shoulder
11	0506-616	1	Panel, Fender - Front (inc. 12)	23	0423-077	6	T-Nut w/Teeth
	0506-584	1	Panel, Fender - Front (inc. 12) (Green)	24	1506-194	2	Extension, Flare - Front
	0506-721	1	Panel, Fender - Front (inc. 12) (Cat Green)	25	0423-361	4	Screw, Machine
12	1406-142	1	● Cover, Access	26	0423-046	4	Rivet, Plastic
	1406-141	1	● Cover, Access (Green)	27	1506-199	1	Panel, Kick - Right
	1406-041	1	● Cover, Access (Cat Green)		1506-200	1	Panel, Kick - Left
13	1506-158	1	Flare - Front - Right	28	1406-063	1	Panel, Fender - Inner Right
	1506-159	1	Flare - Front - Left		1406-064	1	Panel, Fender - Inner Left
14	0423-357	2	Nut, Stamped	29	1406-006	1	Panel, Fender - Inner
15	0423-101	AR	Screw, Body	30	0123-788	AR	Cable Tie - 7.5 in.
16	0423-031	2	Nut, Speed	31	0423-342	6	Screw, Self-Tapping
17	8477-616	2	Screw, Machine	32	8424-602	2	Nut, Flange
Homologated ATV´s							
33	AC000-790	1	Antitheft Device				
34	AC000-793	1	Bracket, antitheft device				

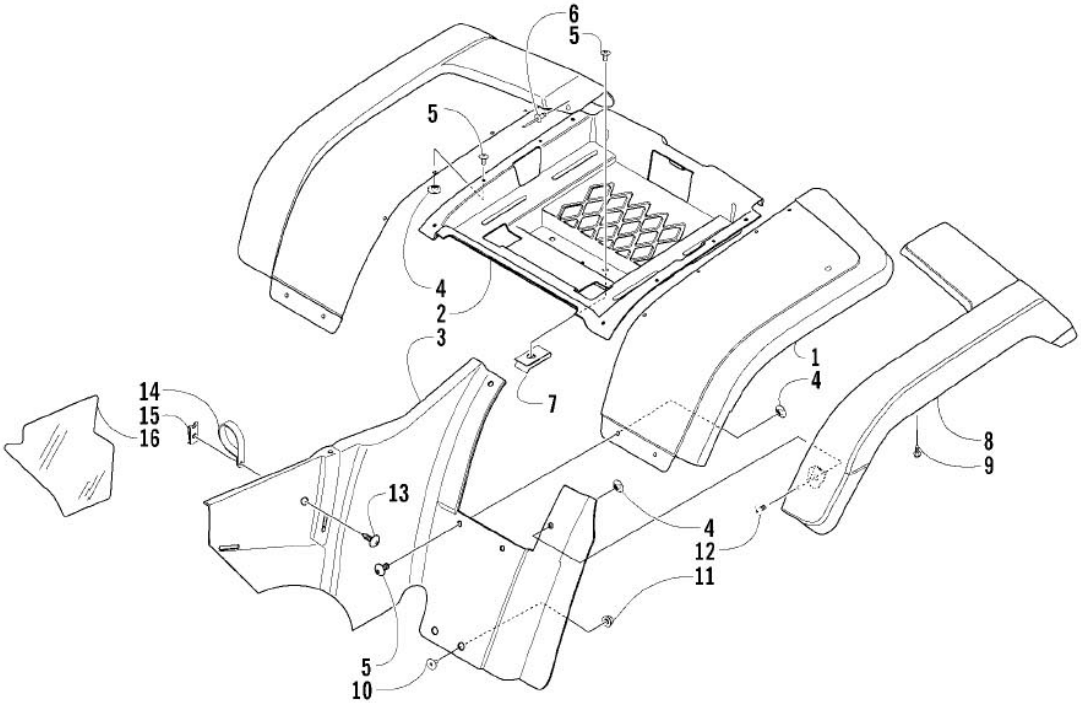

REAR BODY PANEL ASSEMBLY

0738-634

Ref.	Part No.	Qty.	Description	Ref.	Part No.	Qty.	Description
1	0506-908	1	Panel, Fender - Rear - Right	7	0423-031	2	Nut, Speed
	0506-910	1	Panel, Fender - Rear - Left	8	0506-552	1	Flare, Rear - Right
	0506-909	1	Panel, Fender - Rear - Right (Green)		0506-553	1	Flare, Rear - Left
	0506-911	1	Panel, Fender - Rear - Left (Green)	9	0423-342	6	Screw, Self-Tapping
	1506-228	1	Panel, Fender - Rear - Right (Cat Green)	10	0423-101	4	Screw, Body
	1506-230	1	Panel, Fender - Rear - Left (Cat Green)	11	8424-602	4	Nut, Flange
2	0506-935	1	Tray, Storage	12	0423-355	2	Screw, Shoulder
3	0506-923	1	Extension, Fender - Rear - Right	13	0623-784	2	Screw, Self-Tapping
	0506-924	1	Extension, Fender - Rear - Left	14	0423-044	2	Clamp, Tube
4	0423-077	14	T-Nut w/Teeth	15	0423-466	2	Clip, Tinerman
5	0423-419	14	Screw, Machine	16	1406-262	1	Shield, Heat
6	0423-046	2	Rivet, Plastic				

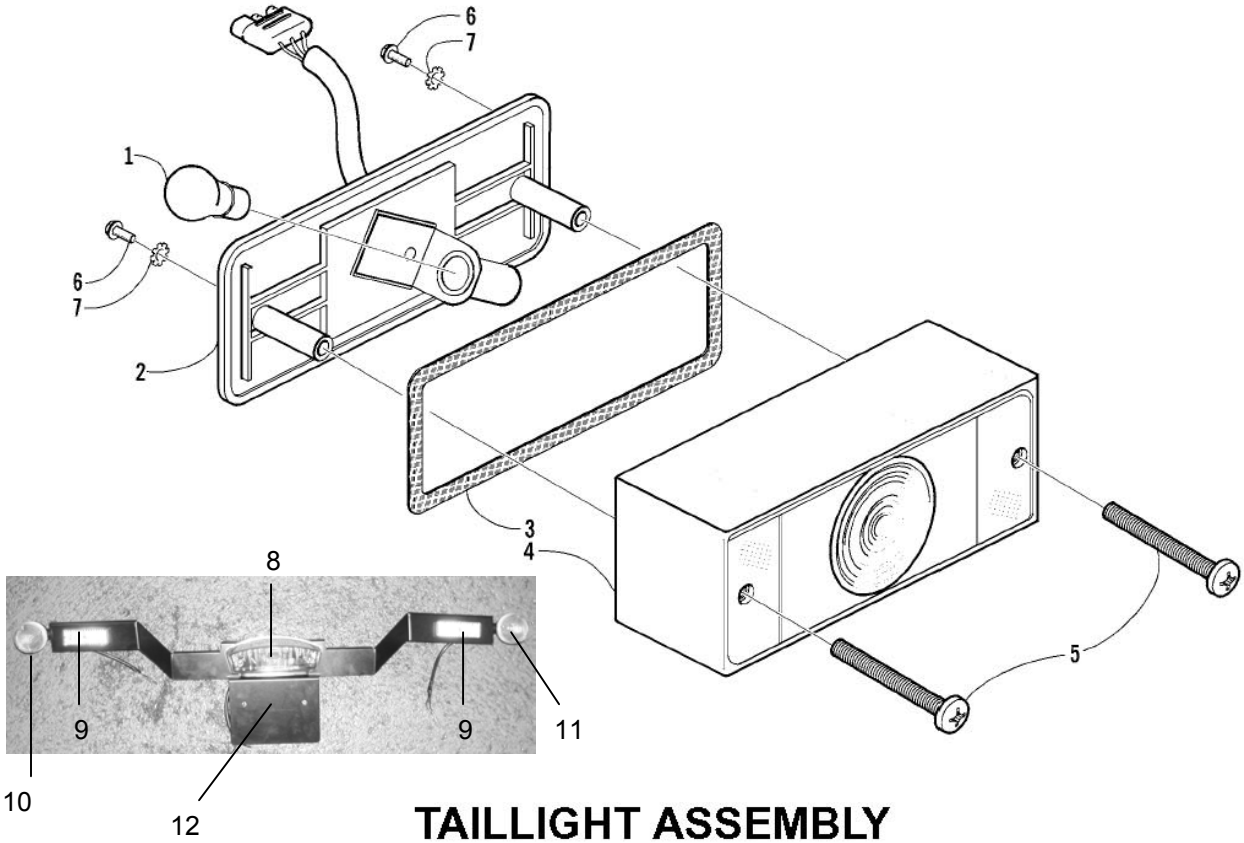

TAILLIGHT ASSEMBLY

(Complete Taillight Assembly p/n 0409-002)

0732-336

Ref.	Part No.	Qty.	Description	Ref.	Part No.	Qty.	Description
1	0109-460	1	Bulb, Stop/Taillight	5	0409-010	2	Screw, Machine
2	0409-011	1	Taillight w/Socket Assembly	6	0423-421	2	Screw, Self-Tapping
3	0409-012	1	Gasket, Taillight Lens	7	8053-212	2	Washer, Lock - External Tooth
4	0409-007	1	Lens, Taillight				
Homologated ATV´s							
8	AC000-079	1	Taillight				
9	AC000-139	2	Reflector				
10	AC000-145	1	Indicator, left				
11	AC000-146	1	Indicator, right				
12	AC000-174	1	Bracket, rear light				

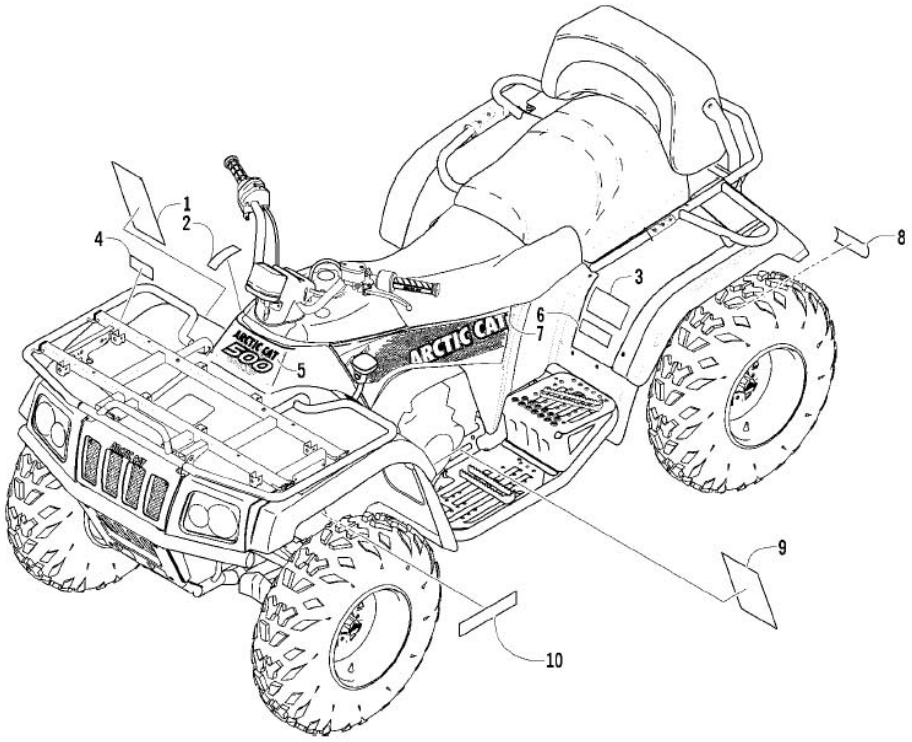

DECALS

0738-635

Ref.	Part No.	Qty.	Description	Ref.	Part No.	Qty.	Description
1	0411-666	1	Decal, Warning - Reverse/Pre-Ride	8	0411-267	1	Decal, Warning - Towing
2	0411-426	1	Decal, Warning - Clutch Cover	9	0411-753	1	Decal, Warning - General/Age
3	0411-730	1	Decal, Warning - Passengers	10	0411-643	1	Decal, CA Emissions
4	0411-576	1	Decal, Warning - Front Rack Load				
5	0411-622	1	Decal, Front				
	0411-623	1	Decal, Front (Green)				
	0411-624	1	Decal, Front (Cat Green)				
6	0411-732	1	Decal, Warning - Tire Pressure				
7	0411-636	1	Decal, Side - Right				
	0411-637	1	Decal, Side - Left				
	0411-634	1	Decal, Side - Right (Green)				
	0411-635	1	Decal, Side - Left (Green)				
	0411-638	1	Decal, Side - Right (Cat Green)				
	0411-639	1	Decal, Side - Left (Cat Green)				

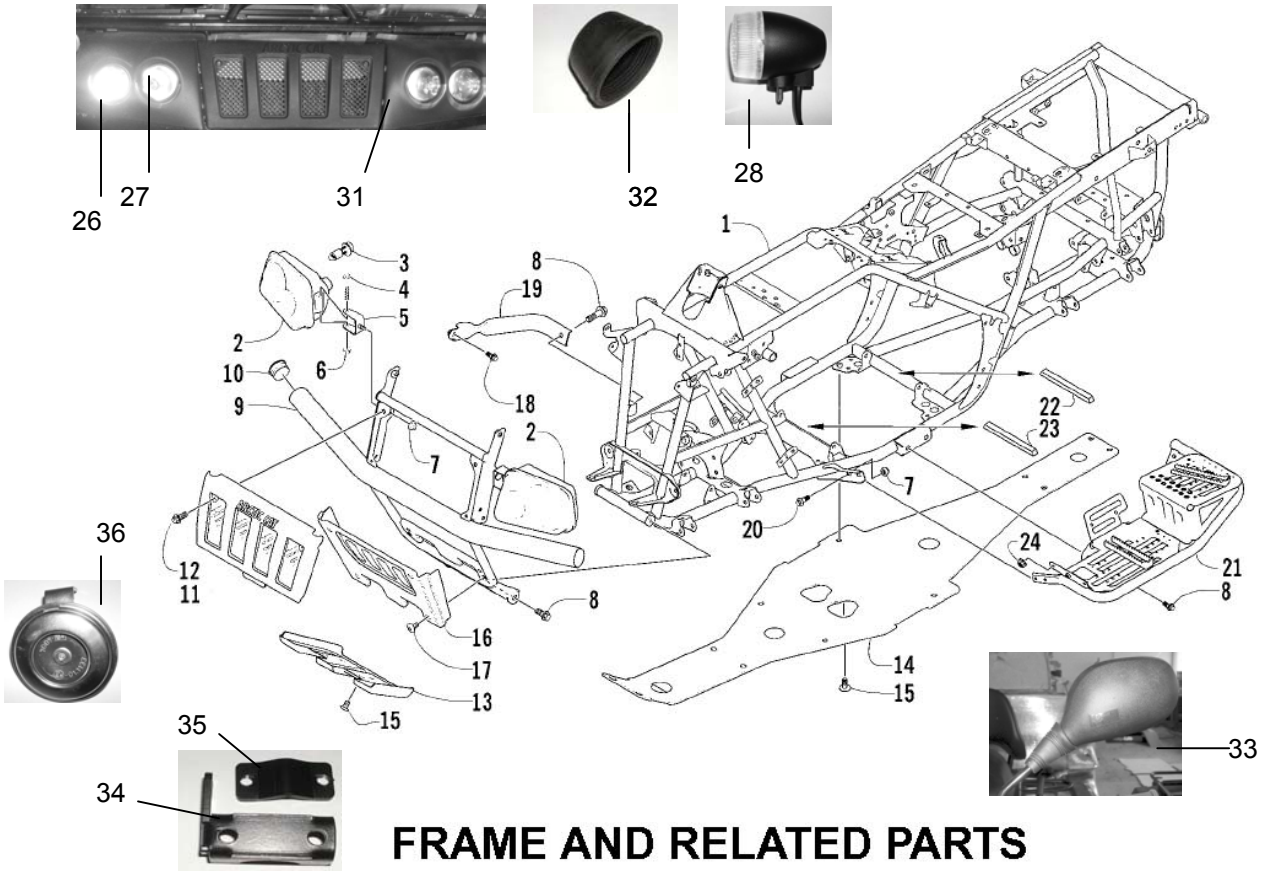

FRAME AND RELATED PARTS

0738-636

Ref.	Part No.	Qty.	Description	Ref.	Part No.	Qty.	Description
1	1506-186	1	Frame, Main	13	0406-834	1	Plate, Skid
2	0409-032	1	Headlight Assembly - Right (inc. 3-6)	14	1406-176	1	Panel, Belly
	0409-031	1	Headlight Assembly - Left (inc. 3-6)	15	0423-101	AR	Screw, Body
3	0409-045	4	● Bulb, Headlight	16	1406-420	1	Grille, Bumper - Lower
4	8410-860	2	● Screw, Cap	17	0423-362	4	Screw, Machine
5	0406-945	2	● Bracket, Headlight Mounting	18	8408-812	2	Screw, Cap
6	0423-375	2	● Nut, Flange	19	0506-653	2	Channel, Bumper Mounting
7	8424-802	6	Nut, Flange	20	8408-816	8	Screw, Cap
8	8409-020	8	Screw, Cap	21	0506-941	1	Footrest - Right
9	0506-544	1	Bumper		0506-942	1	Footrest - Left
10	0406-130	2	Cap, Bumper	22	0406-289	1	Pad, Frame - Rear
11	0406-832	1	Grille, Upper	23	1506-067	1	Foam, Frame
12	0423-361	2	Screw, Machine	24	8424-602	2	Nut, Flange
Homologated ATV´s							
25	AC000-064	1	Towing device	31	AC000-066	1	Orifice headlight round right
26	AC000-136	1	Headlight right		AC000-067	1	Orifice headlight round left
	AC000-136	1	Headlight left	32	AC000-138	4	Rubber headlight
27	AC000-135	1	Highbeam right	33	AC000-751	1	Mirror left
	AC000-135	1	Highbeam left		AC000-752	1	Mirror right
28	AC000-146	1	Direction light right	34	AC000-086	1	Bracket mirror right
	AC000-145	1	Direction light left	35	AC000-089	1	Counterpart mirror right
29	AC000-071	1	Headlight interior tray right	36	AC000-158	1	Horn
	AC000-072	1	Headlight interior tray left				
30	AC000-074	1	Bracket headlight right				
	AC000-073	1	Bracket headlight left				

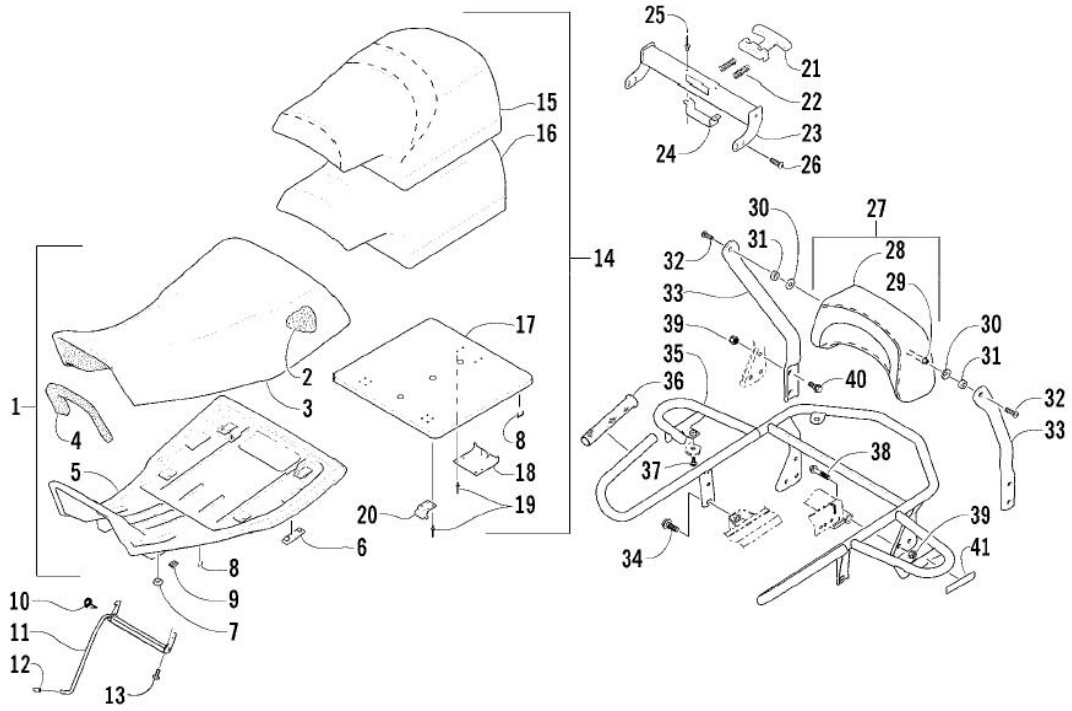

SEAT ASSEMBLY

0738-304

Ref.	Part No.	Qty.	Description	Ref.	Part No.	Qty.	Description
1	0506-613	1	Seat Assembly - Front (inc. 2-9)	22	2606-154	2	Spring, Passenger Seat Latch
2	0506-555	1	● Foam, Seat	23	0506-940	1	Channel, Passenger Seat Latch
3	0506-556	1	● Cover, Seat	24	2706-130	1	Bracket, Retainer - Passenger Seat Latch
4	1406-060	1	● Foam, Sound	25	8060-706	2	Rivet
5	0406-925	1	● Base, Seat Assembly (inc. 6-7)	26	8477-610	4	Screw, Machine
6	0406-879	2	● ● Bumper, Seat - Rear	27	0506-912	1	Backrest Assembly (inc. 28-29)
7	0406-877	2	● ● Bumper, Seat - Front	28	1506-284	1	● Cover, Backrest w/Graphic
8	0624-528	AR	● Staple	29	0114-163	1	● Axle, Backrest
9	0406-930	2	● Plate, Strike - Front Seat Latch	30	0723-003	2	Washer, Cup
10	1406-112	1	Spring, Front Seat Latch	31	0616-547	2	Block, Tension - Backrest
11	1406-185	1	Latch, Seat - Front	32	0623-566	2	Screw, Machine
12	0623-404	1	Cap, Protector	33	0506-965	1	Support, Backrest - Right
13	8477-616	2	Screw, Machine		0506-966	1	Support, Backrest - Left
14	1506-137	1	Seat Assembly - Passenger (inc. 8 and 15-20)	34	8409-020	2	Screw, Cap
15	1506-138	1	● Cover, Seat	35	1506-141	1	Handhold, Passenger
16	1506-139	1	● Foam, Seat	36	1606-442	2	Grip, Passenger Handhold
17	1406-194	1	● Base, Seat	37	0423-101	2	Screw, Body
18	2606-161	1	● Plate, Strike - Passenger Seat Latch	38	0423-420	2	Screw, Shoulder
19	0423-425	12	● Rivet	39	8428-002	6	Nut, Lock
20	1406-203	2	● Bracket, Seat	40	8409-025	4	Screw, Cap
21	2606-159	1	Latch, Seat - Passenger	41	0411-652	2	Decal, Reflector - Red

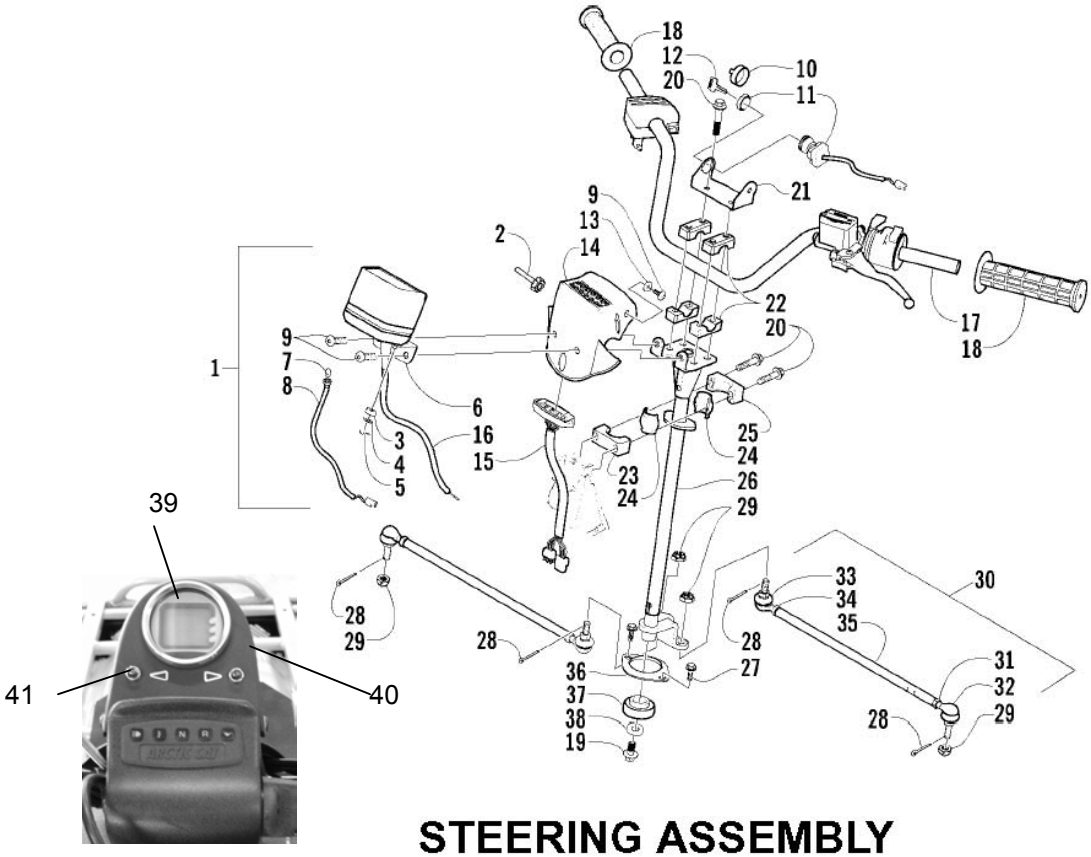

STEERING ASSEMBLY

0737-654

Ref.	Part No.	Qty.	Description	Ref.	Part No.	Qty.	Description
1	0420-031	1	Speedometer (inc. 2-8)	19	8409-020	1	Screw, Cap
2	0420-027	1	● Knob, Speedometer Trip	20	8408-860	6	Screw, Cap
3	0420-016	2	● Mount, Rubber	21	0506-348	1	Bracket, Key Switch
4	0420-017	2	● Washer	22	0405-035	4	Cap, Steering Adjuster
5	0420-015	2	● Pin, Retainer	23	0605-171	1	Housing, Bearing - Lower
6	0420-018	1	● Bracket, Speedometer	24	0405-020	2	Bearing, Steering Post
7	0620-149	1	● Bulb, Speedometer	25	0605-147	1	Housing, Bearing - Upper
8	0420-014	1	● Harness, Speedometer	26	0505-431	1	Post, Steering
9	8477-616	3	Screw, Machine	27	8408-816	2	Screw, Cap
10	0409-013	1	Cover, Key	28	0623-175	4	Pin, Cotter
11	3430-040	1	Switch, Ignition - Assembly (inc. 12)	29	0423-157	4	Nut, Lock
12	3409-007	1	● Key, Ignition - Blank (C Series)	30	0505-408	2	Tie Rod - Assembly (inc. 31-35)
	3409-011	1	● Key, Ignition - Blank (D Series)	31	8420-002	2	● Nut - Right
	3409-012	1	● Key, Ignition - Blank (E Series)	32	0405-082	2	● Ball Joint, Tie Rod - Right
	3409-013	1	● Key, Ignition - Blank (F Series)	33	0405-083	2	● Ball Joint, Tie Rod - Left
13	0423-052	1	Collar, Body	34	0423-013	2	● Nut - Left
14	0405-063	1	Instrument Pod	35	0405-107	2	● Tie Rod
15	0420-035	1	Panel, LED	36	0602-233	1	Flange, Bearing
16	0487-026	1	Cable, Speedometer	37	0405-052	1	Bearing w/Inverted Oil Seal
17	0505-410	1	Tube, Handlebar	38	0423-073	1	Washer
18	0405-106	2	Grip, Handlebar				
Homologated ATV´s							
39	AC000-076	1	Digital Speedometer				
40	AC000-065	1	Orifice, speedometer				
41	AC000-151	2	Control, indicator				

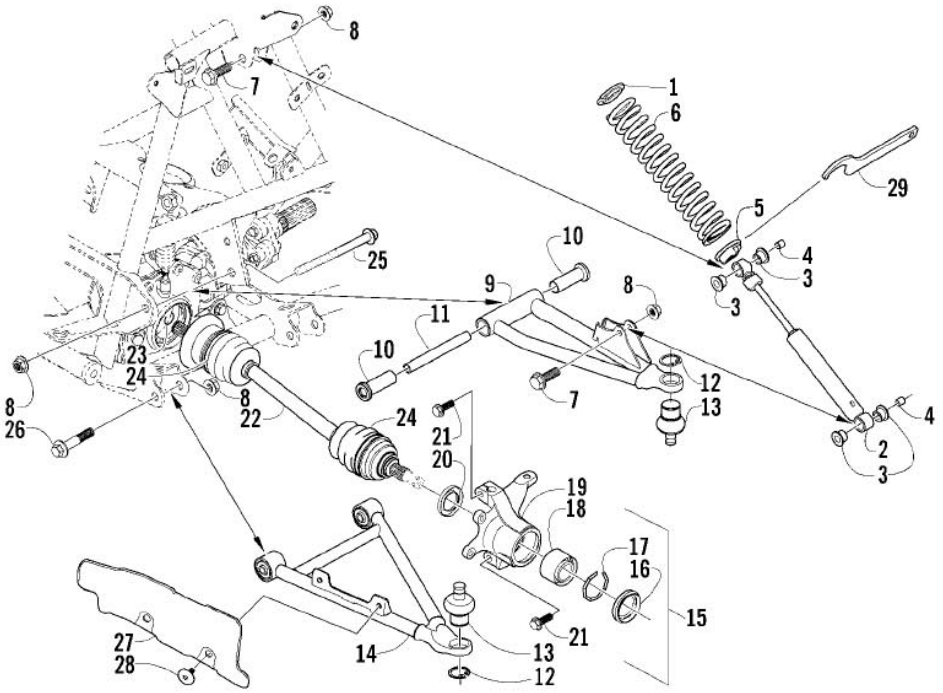

FRONT SUSPENSION ASSEMBLY

0738-637

Ref.	Part No.	Qty.	Description	Ref.	Part No.	Qty.	Description
1	1603-889	2	Retainer, Spring	16	0402-089	2	● Seal, Wheel Bearing - Front
2	0403-116	2	Shock Absorber - Front (inc. 3-4)	17	0423-034	2	● Clip, Bearing
3	0604-310	8	● Bushing, Shock Absorber	18	0402-275	2	● Bearing, Wheel Hub - Front
4	0403-028	4	● Sleeve, Shock	19	0505-062	1	● Knuckle, Steering - Right
5	0403-102	2	Cam, Spring Adjuster		0505-063	1	● Knuckle, Steering - Left
6	0503-232	2	Spring, Shock Absorber	20	0402-069	2	● Seal, Wheel Bearing - Rear
7	8409-040	4	Screw, Cap	21	8409-030	4	Screw, Cap
8	8428-002	10	Nut, Lock	22	0502-544	2	Axle, Drive - Front (inc. 23-24)
9	0503-196	1	A-Arm, Upper Right - Assembly (inc. 10-13)	23	0441-400	2	● Clip, Retaining
				24	0436-276	2	● Repair Kit, Boot - Front Axle
	0503-197	1	A-Arm, Upper Left - Assembly (inc. 10-13)	25	0423-334	2	Screw, Cap
				26	8409-060	4	Screw, Cap
10	0403-081	4	● Bushing	27	1406-034	1	Guard, Boot - Axle - Right
11	0403-080	2	● Collar		1406-035	1	Guard, Boot - Axle - Left
12	0423-009	4	● Clip, Ball Joint	28	0423-101	4	Screw, Body
13	0405-115	4	● Ball Joint - Front	29	0441-587	1	Wrench, Spanner
14	0503-227	1	A-Arm, Lower Right (inc. 12-13)				
	0503-228	1	A-Arm, Lower Left (inc. 12-13)				
15	0505-026	1	Knuckle - Assembly - Right (inc. 16-20)				
	0505-027	1	Knuckle - Assembly - Left (inc. 16-20)				

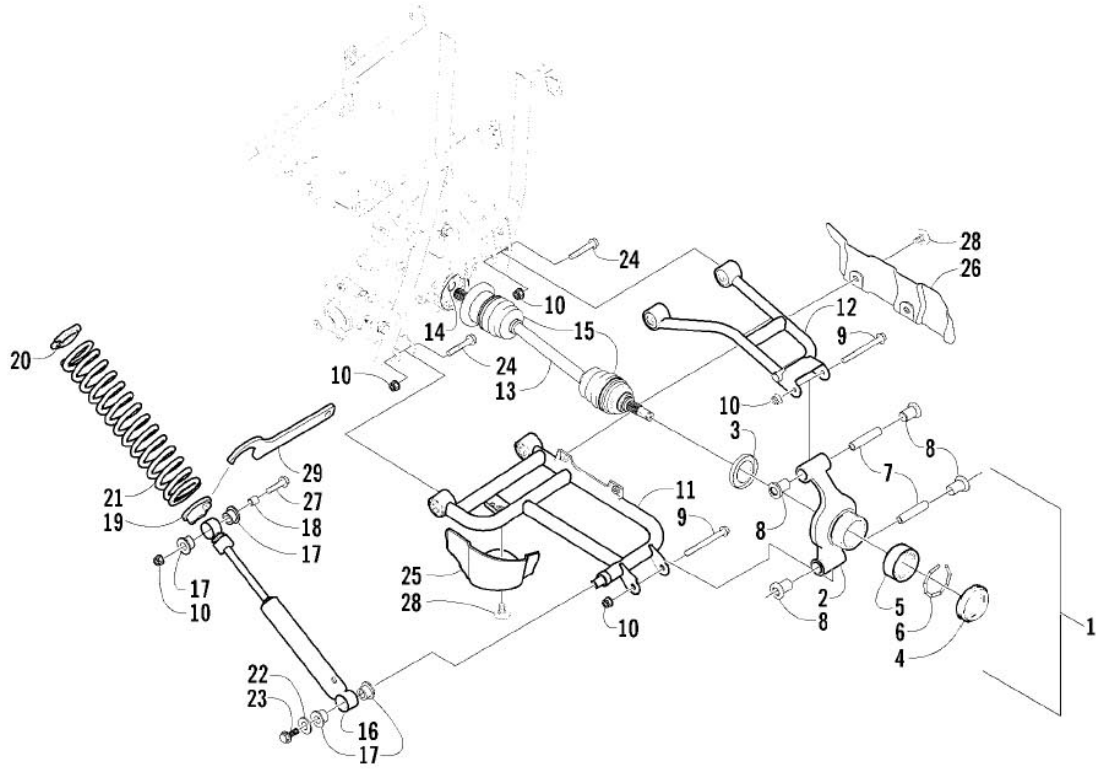

REAR SUSPENSION ASSEMBLY

0737-579

Ref.	Part No.	Qty.	Description	Ref.	Part No.	Qty.	Description
1	0504-226	1	Knuckle, Right Rear - Assembly (inc. 2-8)	14	0441-400	2	● Clip, Retaining
				15	0436-276	2	● Repair Kit, Boot - Rear Axle
	0504-227	1	Knuckle, Left Rear - Assembly (inc. 2-8)	16	0404-069	2	Shock Absorber - Rear (inc. 17-18)
				17	0604-310	8	● Bushing, Shock Absorber
2	0504-224	1	● Knuckle - Right	18	0403-028	2	● Sleeve, Shock Absorber
	0504-225	1	● Knuckle - Left	19	0404-057	2	Cam, Spring Adjuster
3	0402-069	2	● Seal, Wheel Bearing - Rear	20	1603-889	2	Retainer, Spring
4	0402-089	2	● Seal, Wheel Bearing - Front	21	0504-301	2	Spring, Suspension
5	0402-275	2	● Bearing, Wheel	22	0423-087	2	Washer
6	0423-034	2	● Clip, Bearing	23	8408-820	2	Screw, Cap
7	0403-038	4	● Collar, Suspension Bushing	24	8409-060	8	Screw, Cap
8	0403-032	8	● Bushing, Suspension	25	1406-071	1	Guard, Boot - Right
9	8409-000	4	Screw, Cap		1406-072	1	Guard, Boot - Left
10	8428-002	14	Nut, Lock	26	1406-068	1	Guard, Boot - Right
11	0504-228	1	A-Arm, Rear - Lower Right		1406-069	1	Guard, Boot - Left
	0504-229	1	A-Arm, Rear - Lower Left	27	8409-040	2	Screw, Cap
12	0504-232	1	Arm, Rear - Upper Right	28	0423-101	6	Screw, Body
	0504-233	1	Arm, Rear - Upper Left	29	0441-587	1	Wrench, Spanner
13	0502-544	2	Axle, Drive (inc. 14-15)				

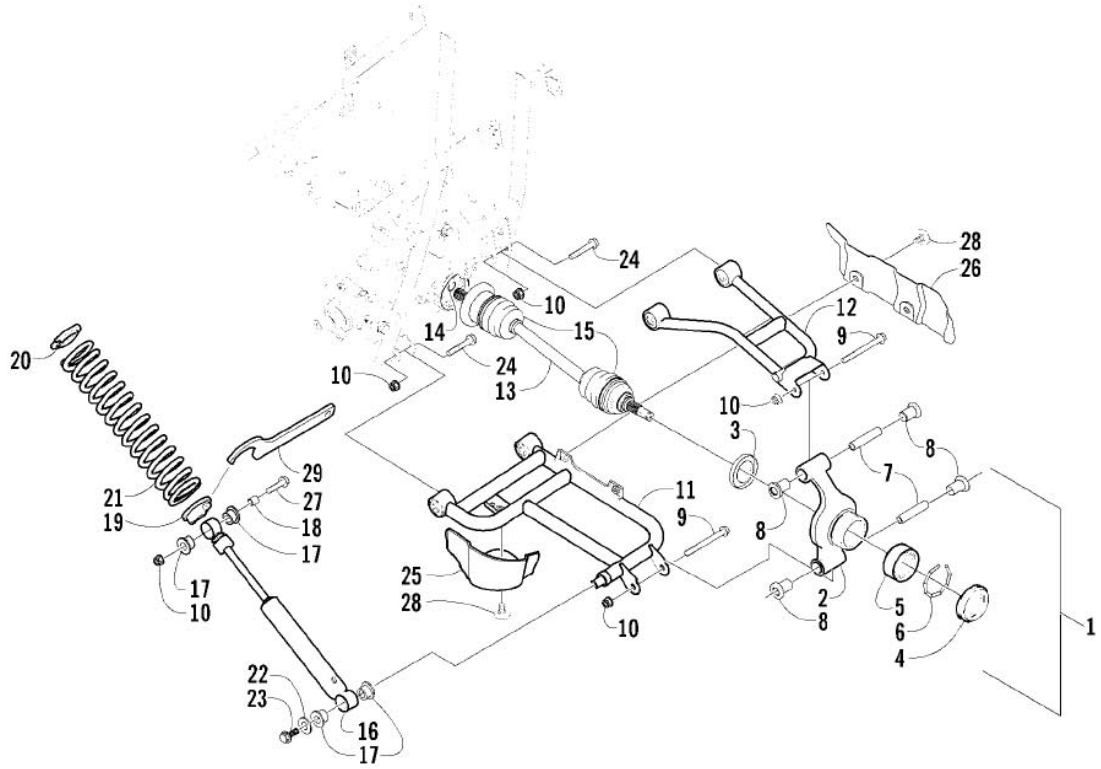

REAR SUSPENSION ASSEMBLY

0737-579

Ref.	Part No.	Qty.	Description	Ref.	Part No.	Qty.	Description
1	0504-226	1	Knuckle, Right Rear - Assembly (inc. 2-8)	14	0441-400	2	● Clip, Retaining
				15	0436-276	2	● Repair Kit, Boot - Rear Axle
	0504-227	1	Knuckle, Left Rear - Assembly (inc. 2-8)	16	0404-069	2	Shock Absorber - Rear (inc. 17-18)
				17	0604-310	8	● Bushing, Shock Absorber
2	0504-224	1	● Knuckle - Right	18	0403-028	2	● Sleeve, Shock Absorber
	0504-225	1	● Knuckle - Left	19	0404-057	2	Cam, Spring Adjuster
3	0402-069	2	● Seal, Wheel Bearing - Rear	20	1603-889	2	Retainer, Spring
4	0402-089	2	● Seal, Wheel Bearing - Front	21	0504-301	2	Spring, Suspension
5	0402-275	2	● Bearing, Wheel	22	0423-087	2	Washer
6	0423-034	2	● Clip, Bearing	23	8408-820	2	Screw, Cap
7	0403-038	4	● Collar, Suspension Bushing	24	8409-060	8	Screw, Cap
8	0403-032	8	● Bushing, Suspension	25	1406-071	1	Guard, Boot - Right
9	8409-000	4	Screw, Cap		1406-072	1	Guard, Boot - Left
10	8428-002	14	Nut, Lock	26	1406-068	1	Guard, Boot - Right
11	0504-228	1	A-Arm, Rear - Lower Right		1406-069	1	Guard, Boot - Left
	0504-229	1	A-Arm, Rear - Lower Left	27	8409-040	2	Screw, Cap
12	0504-232	1	Arm, Rear - Upper Right	28	0423-101	6	Screw, Body
	0504-233	1	Arm, Rear - Upper Left	29	0441-587	1	Wrench, Spanner
13	0502-544	2	Axle, Drive (inc. 14-15)				

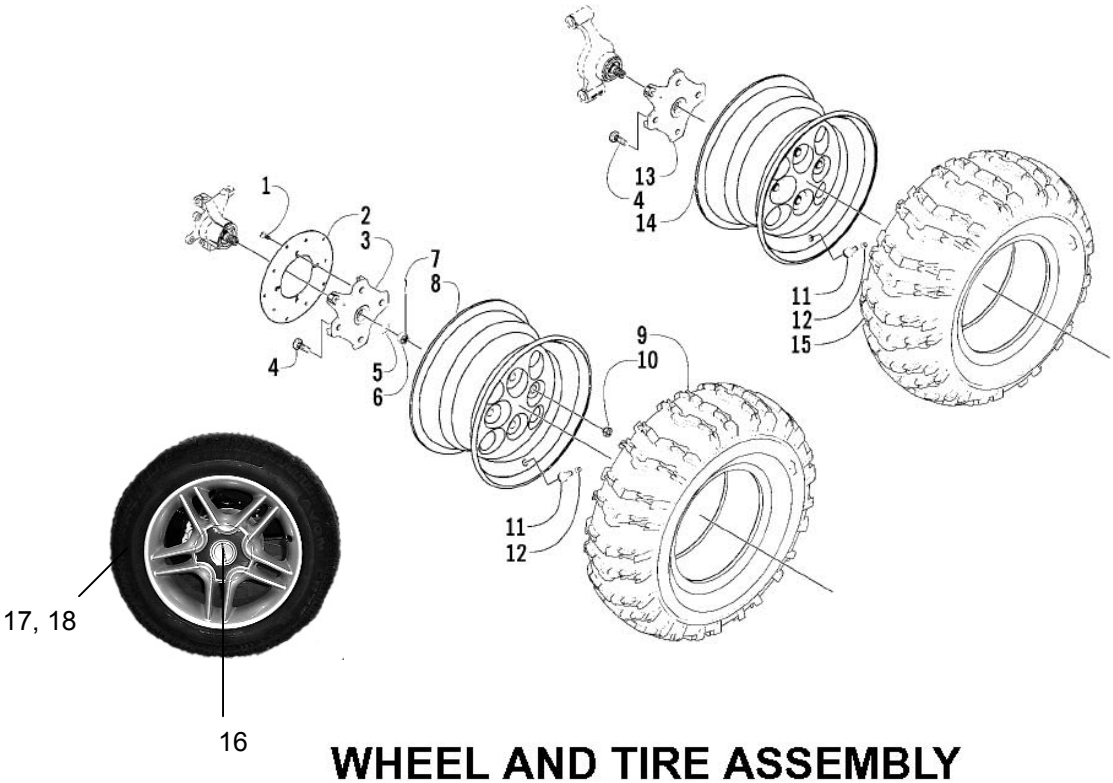

WHEEL AND TIRE ASSEMBLY

0738-484

Ref.	Part No.	Qty.	Description	Ref.	Part No.	Qty.	Description
1	0423-029	12	Screw, Machine	9	1402-100	2	Tire - Front
2	0402-874	3	Disc, Brake	10	0423-408	16	Nut, Mounting - Wheel
3	0502-421	2	Hub, Wheel - Front (inc. 4)	11	0402-064	4	Stem, Valve (inc. 12)
4	0402-974	16	● Stud, Wheel Hub	12	0402-140	4	● Cap, Valve Stem
5	0402-181	4	Seal, Hub	13	0502-423	1	Hub, Wheel - Rear - Left (inc. 4)
6	0423-394	4	Nut, Castle		0502-421	1	Hub, Wheel - Rear - Right (inc. 4)
7	0423-407	4	Pin, Cotter	14	0402-858	2	Wheel - Rear
8	0402-856	2	Wheel - Front	15	1402-137	2	Tire - Rear
Homologated ATV´s							
16	AC000-200	4	Rim, aluminium 15" x 7				
17	AC000-202	2	Tire front 185x65-15, road				
18	AC000-215	2	Tire rear 205x60-15, road				

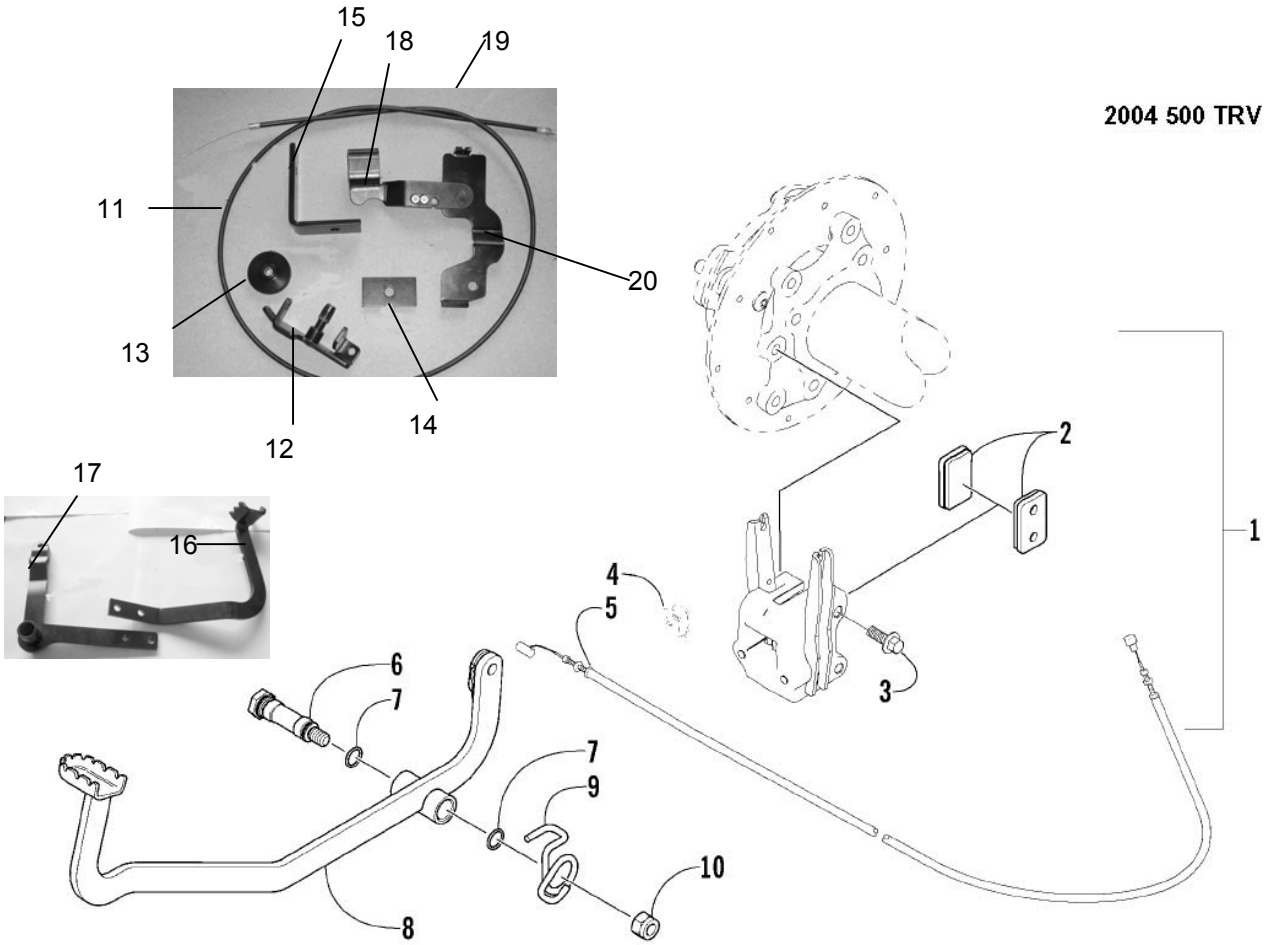

AUXILIARY BRAKE ASSEMBLY

0737-565

Ref.	Part No.	Qty.	Description	Ref.	Part No.	Qty.	Description
1	0502-372	1	Auxiliary Brake Assembly (inc. 2)	6	0402-872	1	Axle, Brake Lever
2	0402-958	2	● Pad, Brake	7	1602-213	2	O-Ring
3	8408-825	2	Screw, Cap	8	0502-236	1	Lever, Brake
4	0402-379	1	Wire Form, Cable	9	0502-395	1	Spring, Brake Lever
5	0487-029	1	Cable, Brake - Rear	10	8422-002	1	Nut
Homologated ATV´s							
11	AC000-095	1	Bowdencable				
12	AC000-172	1	Bracket, diverter pulley				
13	AC000-103	1	Diverter pulley				
14	AC000-080	1	Counter part, parking brake				
15	AC000-081	1	Bracket parking brake				
16	AC000-083	1	Lever, footbrake part 1				
17	AC000-084	1	Lever, footbrake part 2				
18	AC000-164	1	Lever, parking brake				
19	AC000-165	1	Distance sleeve				
20	AC000-166	1	Bracket, cable parking brake				

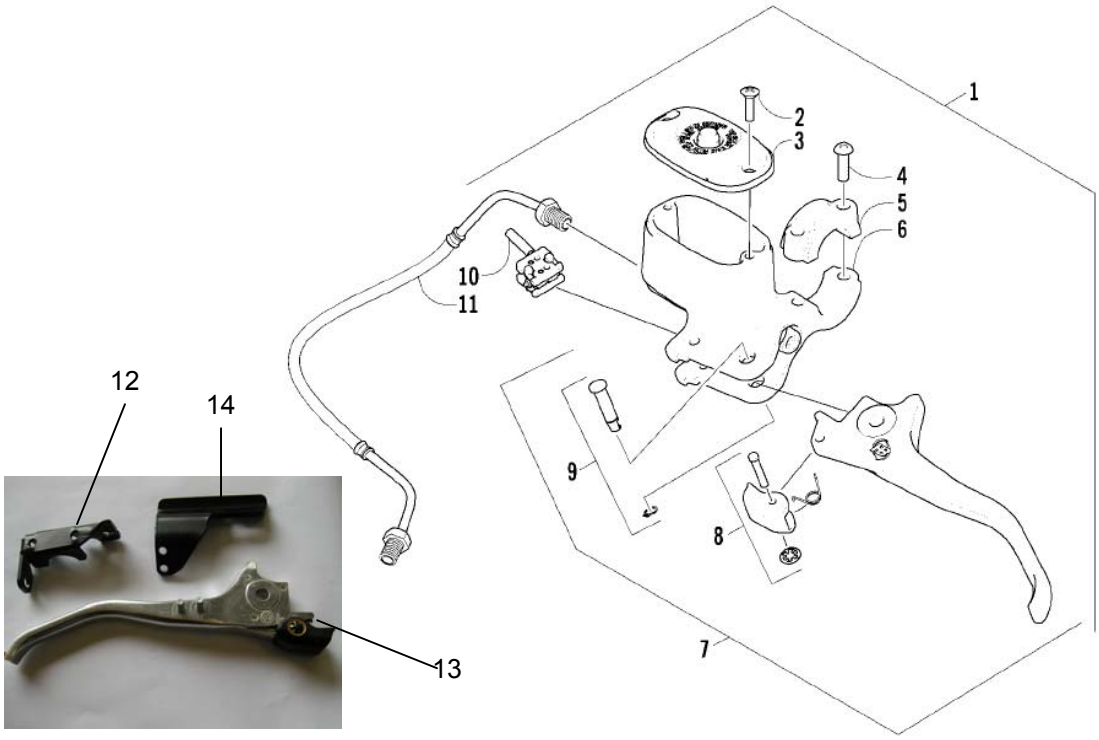

HYDRAULIC HAND BRAKE ASSEMBLY

0738-331

Ref.	Part No.	Qty.	Description	Ref.	Part No.	Qty.	Description
1	0502-561	1	Brake Assembly (inc. 2-10)	7	0502-562	1	● Lever Assembly - Kit (inc. 8-9)
2	0502-566	1	● Screw, Reservoir Cover - Kit	8	0502-563	1	● ● Lock, Brake Lever - Kit
3	0502-565	1	● Cover, Reservoir - Kit	9	0502-580	1	● ● Lever Pin - Kit
4	0502-568	1	● Screw, Master Cylinder Clamp - Kit	10	0502-564	1	● Switch, Brake - Kit
5	0502-567	1	● Clamp, Master Cylinder - Kit	11	0402-962	1	Brakeline, Hydraulic
6	0502-516	1	● Master Cylinder Assembly - Kit				
Homologated ATV´s							
12	AC000-085	1	Bracket handbrake cylinder				
13	AC000-075	1	Lever handbrake				
14	AC000-087	1	Lever bowdencable				

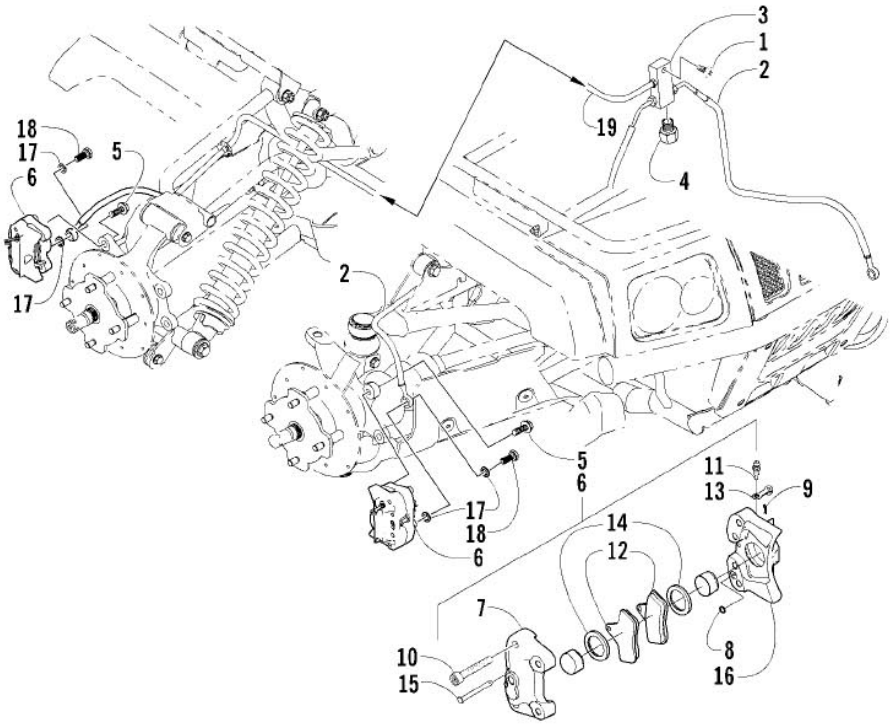

HYDRAULIC BRAKE ASSEMBLY

0738-382 *Not a Service Part

Ref.	Part No.	Qty.	Description	Ref.	Part No.	Qty.	Description
1	8476-625	1	Screw, Cap	10	0402-492	12	● Screw, Cap
2	0402-961	2	Hose, Brake - Front	11	0402-491	3	● Valve, Bleed
3	1402-086	1	Block, Junction	12	0402-882	6	● Pad, Brake
4	1402-031	1	Plug	13	0402-493	3	● Cap, Bleed Valve
5	8408-825	6	Screw, Cap	14	0402-980	6	● O-Ring, Brake Caliper
6	0502-335	1	Caliper, Brake - Right Front (inc. 7-16)	15	0402-495	3	● Pin, Brake Caliper
	0502-336	2	Caliper, Brake - Left Front and Right Rear (inc. 7-16)	16	*	3	● Housing, Caliper
7	*	3	● Housing, Caliper	17	0423-178	6	Washer, Crush
8	0402-490	3	● O-Ring	18	0423-413	3	Bolt, Banjo Fitting
9	0402-496	3	● Clip, Hairpin	19	1402-205	1	Hose, Brake - Rear

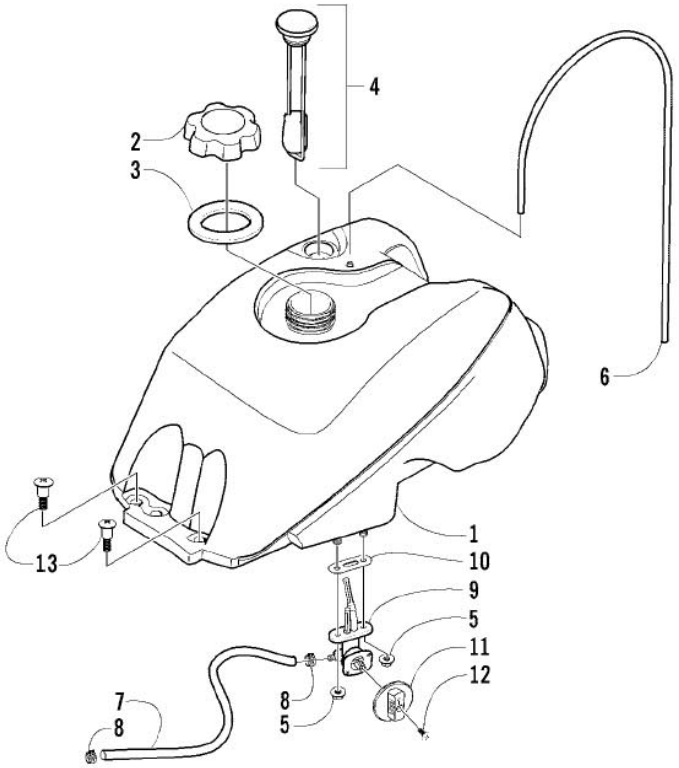

GAS TANK ASSEMBLY

0736-991

Ref.	Part No.	Qty.	Description	Ref.	Part No.	Qty.	Description
1	0570-066	1	Tank, Gas - Assembly (inc. 2-10)	8	0423-152	2	● Clamp, Hose - Spring
2	0470-438	1	● Cap, Gas Tank (inc. 3)	9	0470-445	1	● Valve, Fuel Shut-Off (inc. 10)
3	0109-733	1	● ● Gasket, Tank Cap	10	0470-364	1	● ● Gasket, Fuel Shut-Off Valve
4	0570-086	1	● Gauge, Fuel w/Gasket (Press-Fit)	11	0470-408	1	Knob, Fuel Shut-Off Valve
5	0423-398	2	● Nut, Lock	12	0423-146	1	Screw, Fuel Shut-Off Valve Knob
6	0470-416	1	● Hose, Vent	13	0423-130	2	Screw, Gas Tank
7	0610-007	AR	● Hose, Gasline - 25 ft				

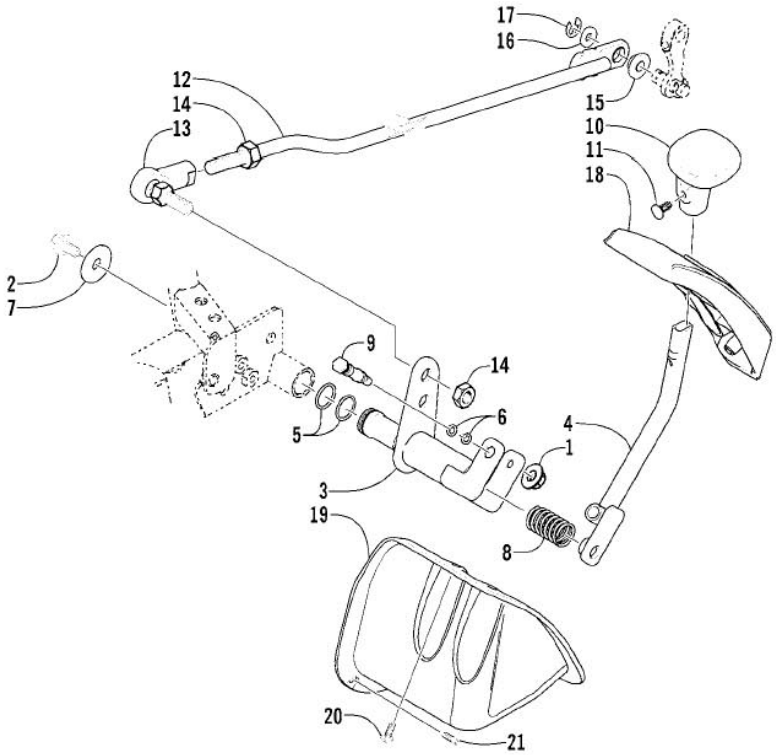

REVERSE SHIFT LEVER ASSEMBLY

0737-070

Ref.	Part No.	Qty.	Description	Ref.	Part No.	Qty.	Description
1	8424-602	1	Nut	12	0502-146	1	Linkage, Shift
2	8408-812	1	Screw, Cap	13	0402-844	1	End, Rod
3	0502-187	1	Axle, Reverse Shift Lever	14	0623-294	2	Nut
4	0502-185	1	Lever, Reverse Shift	15	0423-091	1	Bushing, Shift Linkage
5	0423-299	2	O-Ring	16	8050-242	1	Washer
6	0423-182	2	O-Ring	17	0423-169	1	E-Ring
7	0423-087	1	Washer	18	0402-685	1	Plate, Shift
8	0502-410	1	Spring, Reverse Shift Lever	19	0406-943	1	Shield, Linkage
9	0402-675	1	Axle, Pivot	20	0423-371	3	Screw, Machine
10	0402-843	1	Handle, Reverse Shift Lever	21	0623-309	1	Screw, Self-Tapping
11	0423-345	1	Clip, Push				

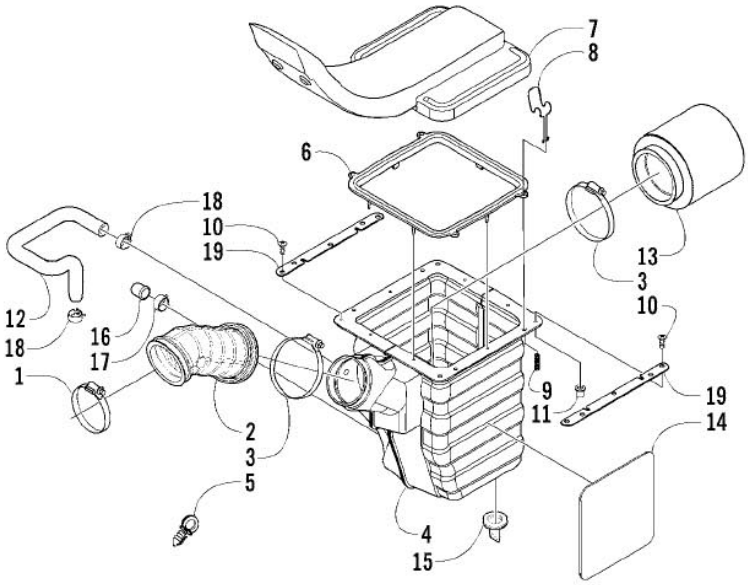

AIR INTAKE ASSEMBLY

0736-950

Ref.	Part No.	Qty.	Description	Ref.	Part No.	Qty.	Description
1	0423-019	1	Clamp	11	0123-010	4	Nut, Expansion
2	0470-455	1	Boot, Air Intake	12	0410-004	1	Hose, Crankcase Vent
3	0423-018	2	Clamp	13	0470-460	1	Filter, Air
4	0470-446	1	Housing, Air Intake	14	0412-141	1	Shield, Heat
5	0623-101	1	Clip, Retaining	15	0470-442	1	Valve, Drain
6	0470-343	1	Gasket	16	1673-272	1	Cap, Drain Tube
7	0470-459	1	Snorkel	17	0423-047	1	Clamp, Hose
8	0470-307	4	Clamp	18	0423-045	2	Clamp, Hose - Spring
9	0423-037	4	Spring	19	0470-351	2	Support, Air Intake Flange
10	0623-121	4	Screw, Machine				

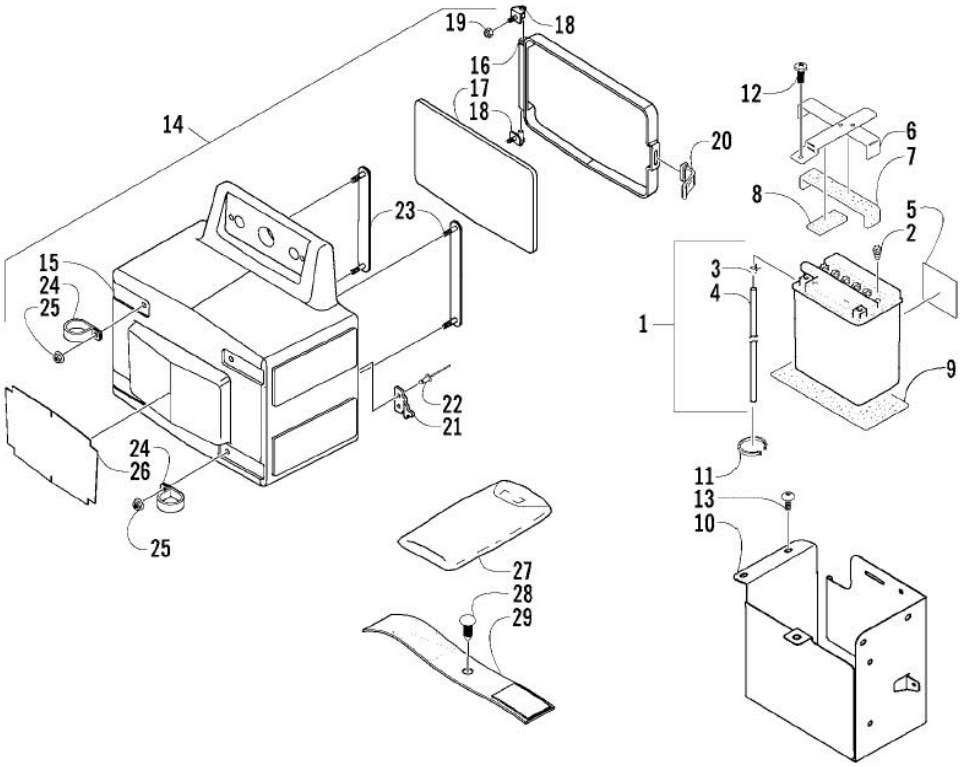

STORAGE BOX AND BATTERY ASSEMBLY

0738-927

Ref.	Part No.	Qty.	Description	Ref.	Part No.	Qty.	Description
1	0745-045	1	Battery Assembly (inc. 2-5)	16	1406-218	1	● Cover, Storage Box
2	0645-045	6	● Cap, Battery	17	1406-211	1	● Seal, Storage Box Cover
3	0645-152	1	● Clamp, Hose	18	0506-674	2	● Hinge
4	0645-263	1	● Hose, Battery Vent	19	8424-502	2	● Nut, Lock
5	0645-151	1	● Label, Warning - Battery	20	1406-134	1	● Strap, Storage Box Cover
6	0506-877	1	Strap, Battery w/Pads (inc. 7-8)	21	1406-210	1	● Bracket, Latch
7	1406-266	1	● Pad, Battery - Upper Rear	22	0623-685	2	● Rivet
8	1406-265	1	● Pad, Battery - Upper Front	23	0506-944	2	Bracket, Mounting - Storage Box
9	1406-219	1	Pad, Battery - Lower	24	0423-403	4	Clamp, Tube
10	1506-365	1	Box, Battery	25	8424-602	4	Nut, Flange
11	0123-903	1	Cable Tie - 11.5 in.	26	1406-260	1	Shield, Heat
12	8477-610	1	Screw, Machine	27	0444-122	1	Kit, Tool
13	8477-616	5	Screw, Machine	28	0423-478	1	Clip, Retaining
14	0506-943	1	Box, Storage - Assembly (inc. 15-22)	29	0406-379	1	Strap, Tool
15	1406-209	1	● Box, Storage				

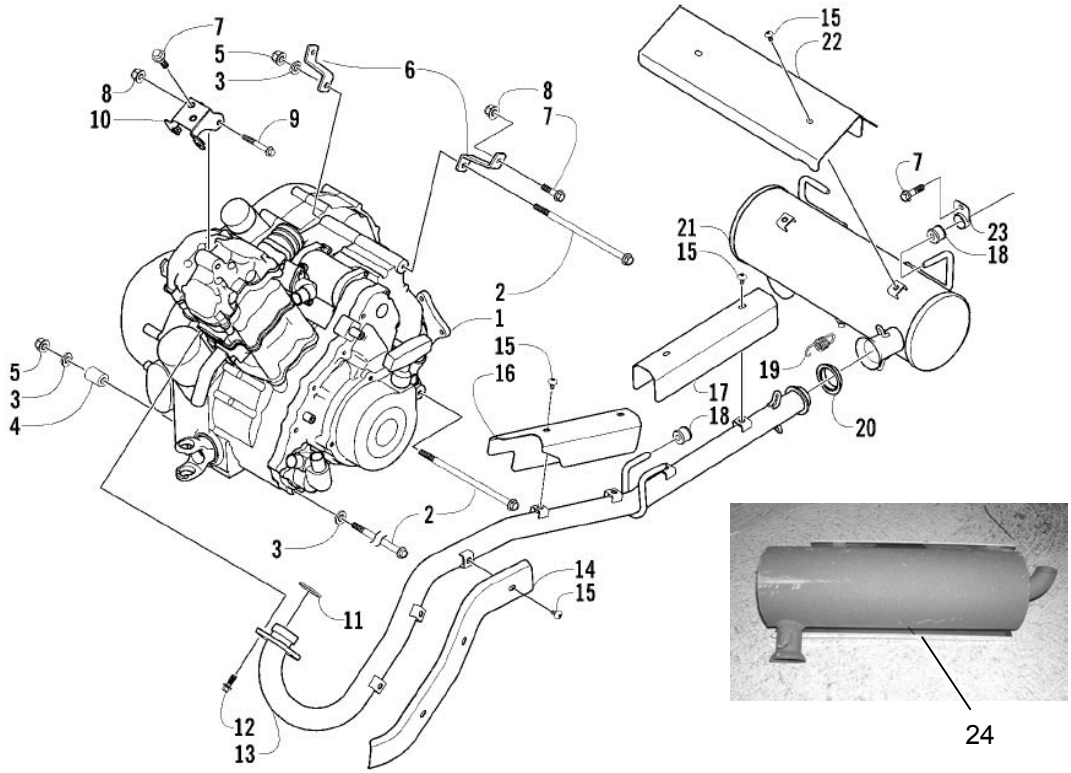

ENGINE AND EXHAUST

0738-487

Ref.	Part No.	Qty.	Description	Ref.	Part No.	Qty.	Description
1	0462-030	1	Engine	12	8408-820	2	Screw, Cap
2	0423-405	3	Screw, Cap	13	0512-143	1	Pipe, Exhaust
3	0423-426	4	Washer, Engine	14	0412-189	1	Cover, Exhaust - Front
4	0423-042	2	Spacer, Engine	15	8477-610	11	Screw, Machine
5	8428-002	3	Nut, Lock	16	0412-224	1	Cover, Exhaust - Middle
6	1506-203	1	Bracket, Engine - Right	17	0412-225	1	Cover, Exhaust - Rear
	1506-204	1	Bracket, Engine - Left	18	0412-215	1	Bushing, Exhaust
7	8408-816	5	Screw, Cap	19	0612-668	2	Spring, Exhaust
8	8424-802	3	Nut	20	0612-188	1	Gasket, Exhaust
9	8408-860	1	Screw, Cap	21	0512-141	1	Muffler
10	0506-546	1	Bracket, Engine - Upper	22	0412-229	1	Cover, Muffler
11	0412-007	1	Seal, Exhaust	23	1506-184	1	Bracket, Exhaust
Homologated ATV´s							
24	AC000-178	1	Exhaust				

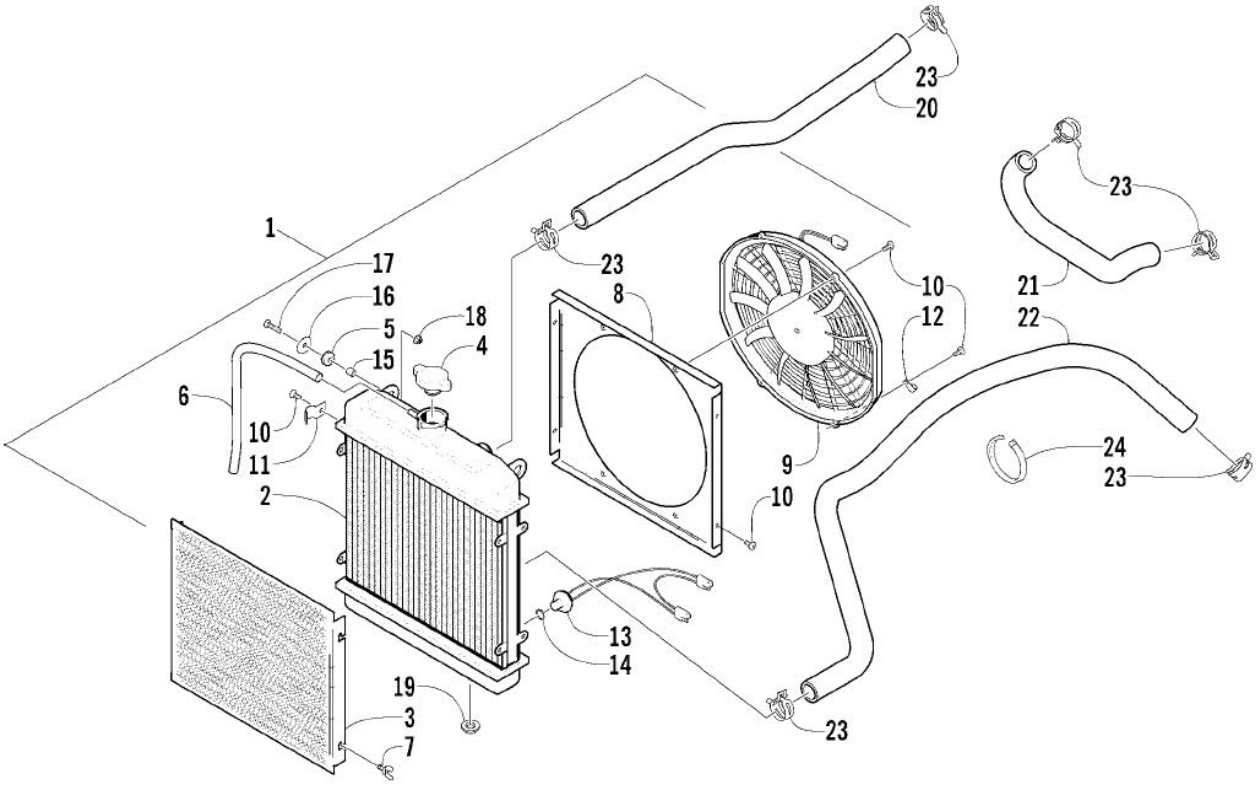

COOLING ASSEMBLY

0736-969

Ref.	Part No.	Qty.	Description	Ref.	Part No.	Qty.	Description
1	0413-038	1	Radiator Assembly (inc. 2-15)	13	0413-045	1	● Sender, Temperature - Coolant
2	0413-043	1	● Radiator	14	0423-390	1	● O-Ring
3	0413-007	1	● Screen, Radiator	15	0423-036	2	● Collar
4	0413-002	1	● Cap, Radiator	16	0623-184	2	Washer
5	0423-030	2	● Grommet	17	8476-625	2	Screw, Cap
6	0610-016	AR	● Hose - 25 ft	18	0623-038	2	Nut w/Washer
7	0413-009	4	● Screw, Thumb	19	0423-028	2	Bushing, Stem
8	0413-046	2	● Shroud, Fan	20	0410-002	1	Hose, Coolant - Upper
9	0413-044	1	● Fan, Cooling	21	0410-022	1	Hose, Coolant - Crossover
10	8475-512	8	● Screw, Machine	22	0410-041	1	Hose, Coolant - Lower
11	0423-351	1	● Clamp, Wire	23	0423-070	6	Clamp, Hose
12	0123-397	1	● Clamp, Cable	24	0623-751	1	Cable Tie

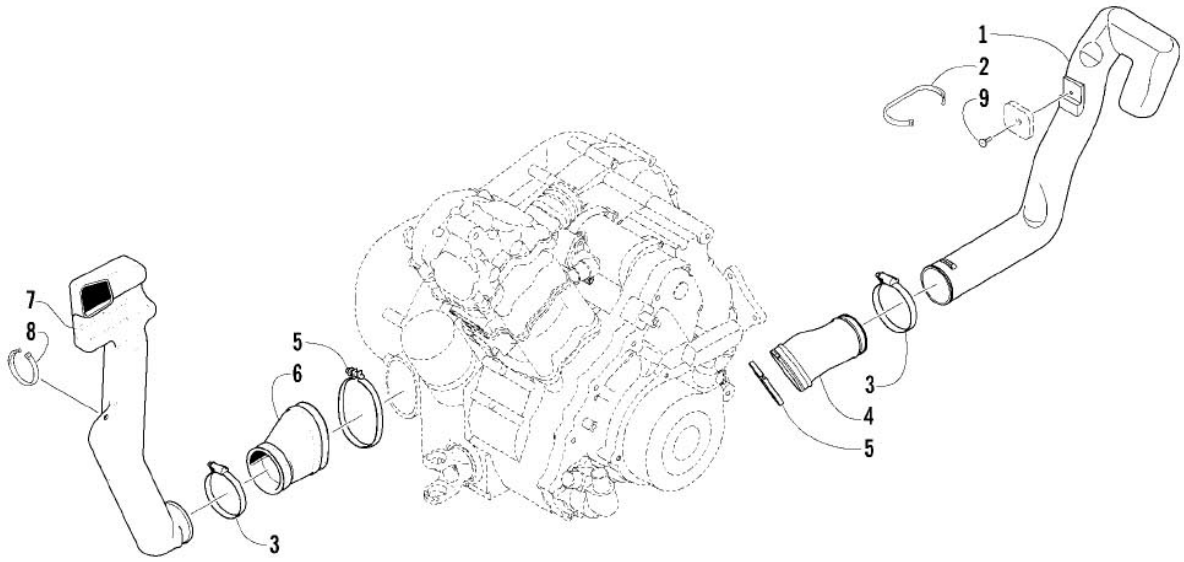

CASE/BELT COOLING ASSEMBLY

0738-311

Ref.	Part No.	Qty.	Description	Ref.	Part No.	Qty.	Description
1	0413-062	1	Duct, Belt Cooling - Rear	6	0413-049	1	Boot, Duct - Front
2	0123-903	1	Cable Tie - 11.5 in.	7	0413-042	1	Duct, Belt Cooling - Front
3	0423-380	2	Clamp, Boot	8	0123-788	1	Cable Tie - 7.5 in.
4	0413-055	1	Boot, Duct - Rear	9	0623-301	1	Screw, Self-Tapping
5	3402-449	2	Clamp, Boot				

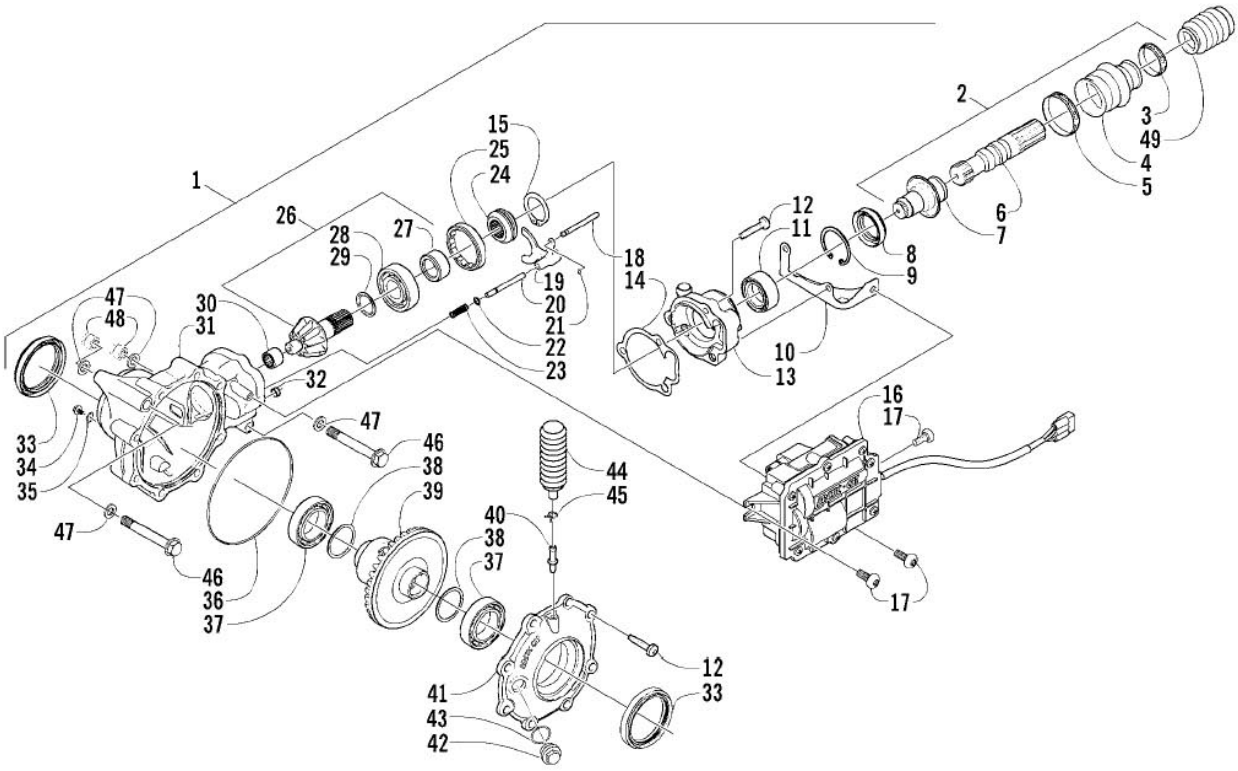

FRONT DRIVE GEARCASE ASSEMBLY

0738-388

Ref.	Part No.	Qty.	Description
1	0502-474	1	Gearcase, Front Drive - Assembly (inc. 2-43)
2	0502-385	1	● Shaft, Propeller - Assembly (inc. 3-7)
3	0423-411	1	● ● Clamp, Boot
4	0402-985	1	● ● Boot, Propeller Shaft
5	0423-393	1	● ● Clamp, Boot
6	1402-045	1	● ● Shaft, Output
7	0502-407	1	● ● Shaft, Input
8	1402-011	1	● Seal
9	0423-423	1	● Ring, Retaining
10	0502-347	1	● Bracket, Actuator
11	1402-043	1	● Bearing
12	0423-118	11	● Screw, Self-Tapping
13	0502-406	1	● Housing, Pinion
14	0402-947	1	● Gasket, Flange
15	0423-417	1	● Ring, Retaining
16	0502-296	1	● Actuator
17	0423-396	3	● Screw, Self-Tapping
18	0402-997	1	● Shaft, Selector
19	0402-998	1	● Fork, Selector
20	0402-417	1	● Shaft, Shuttle
21	0423-402	1	● Ring, Retaining
22	0423-147	1	● O-Ring
23	0402-999	1	● Spring, Return
24	0402-413	1	● Coupler, Drive
25	0402-357	1	● Collar, Lock
26	0502-123	1	● Gear, Pinion - Assembly - 10T (inc. 27-29)
27	0402-336	1	● ● Collar, Retaining
28	0402-327	1	● ● Bearing
29	0402-424	AR	● ● Shim
	0402-425	AR	● ● Shim
	0402-426	AR	● ● Shim
	0402-427	AR	● ● Shim
	0402-428	AR	● ● Shim
30	0402-328	1	● Bearing
31	0502-120	1	● Housing, Gearcase
32	0402-411	1	● Pin, Dowel
33	0402-394	2	● Seal
34	0402-450	1	● Plug, Magnetic (inc. 35)
35	0423-153	1	● ● O-Ring
36	0423-149	1	● O-Ring
37	0402-393	2	● Bearing
38	0402-405	AR	● Shim
	0402-406	AR	● Shim
	0402-407	AR	● Shim
	0402-408	AR	● Shim
	0402-409	AR	● Shim
39	0502-124	1	● Gear, Ring - 36T
40	1402-104	1	● Fitting
41	0502-121	1	● Cover, Gearcase
42	0402-333	1	● Plug, Fill (inc. 43)
43	0423-154	1	● ● O-Ring
44	0402-147	1	Bladder, Gearcase
45	0423-315	1	Clamp, Fitting
46	0423-404	2	Screw, Cap
47	0423-426	4	Washer
48	8428-002	2	Nut, Lock
49	0402-966	1	Boot, Shaft

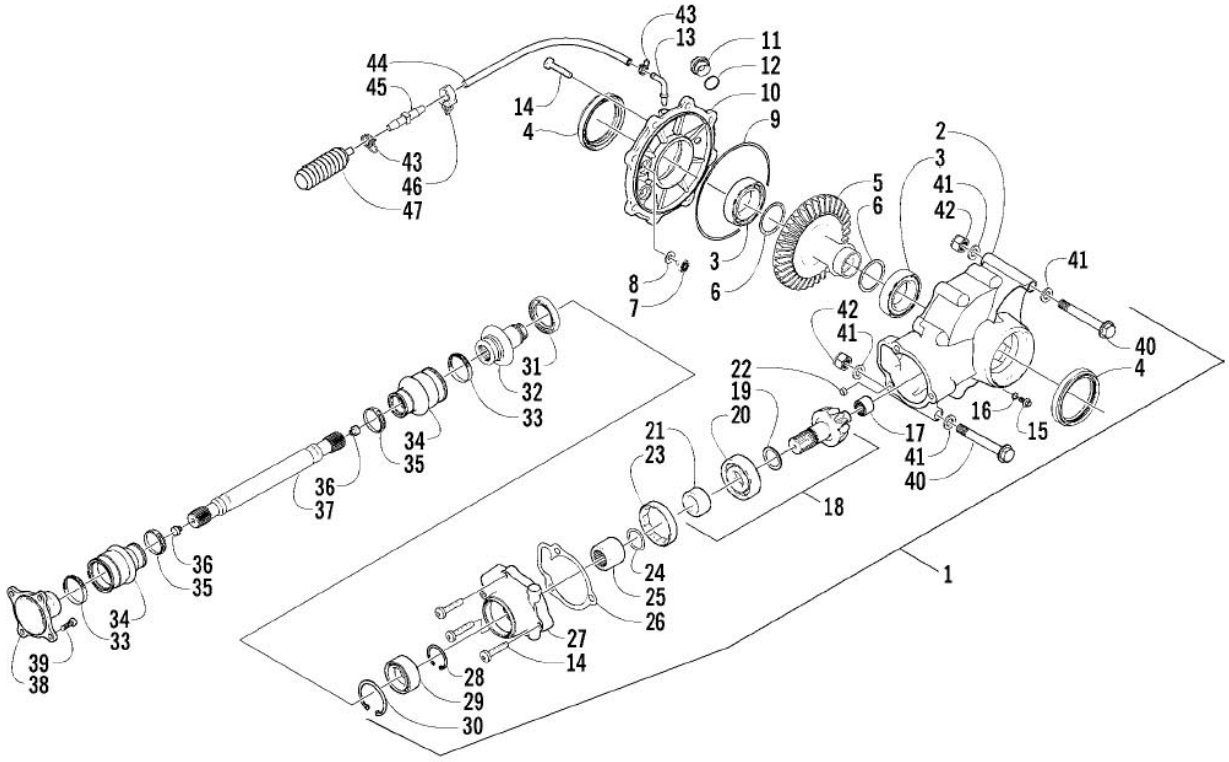

REAR DRIVE GEARCASE ASSEMBLY

0738-506

Ref.	Part No.	Qty.	Description	Ref.	Part No.	Qty.	Description
1	0502-453	1	Gearcase, Rear Drive - Assembly (inc. 2-32)	20	0402-327	1	● ● Bearing
2	0502-352	1	● Housing, Gearcase	21	0402-336	1	● ● Collar, Retaining
3	0402-393	2	● Bearing	22	0402-411	1	● Pin, Dowel
4	0402-394	2	● Seal	23	0402-331	1	● Collar, Lock
5	0402-965	1	● Gear, Ring - 36T	24	0402-982	1	● Washer, Wave
6	0402-405	AR	● Shim	25	0402-981	1	● Collar, Shaft
	0402-406	AR	● Shim	26	0402-947	1	● Gasket, Flange
	0402-407	AR	● Shim	27	0502-380	1	● Housing, Pinion
	0402-408	AR	● Shim	28	0423-417	1	● Ring, Retaining
	0402-409	AR	● Shim	29	1402-043	1	● Bearing
7	0402-326	1	● Button, Thrust	30	0423-423	1	● Ring, Retaining
8	0402-429	AR	● Shim	31	1402-011	1	● Seal
	0402-430	AR	● Shim	32	0502-407	1	● Shaft, Input
	0402-431	AR	● Shim	33	0423-393	2	Clamp, Boot
	0402-432	AR	● Shim	34	0402-985	2	Boot
	0402-433	AR	● Shim	35	0423-411	2	Clamp, Boot
9	0423-149	1	● O-Ring	36	0673-618	2	Bumper, Propeller Shaft
10	0502-346	1	● Cover, Gearcase	37	1402-092	1	Shaft, Propeller
11	0402-333	1	● Plug, Fill (inc. 12)	38	0402-950	1	Flange, Output
12	0423-154	1	● ● O-Ring	39	8408-820	4	Screw, Cap
13	1402-102	1	● Fitting	40	0423-404	2	Screw, Cap
14	0423-118	11	● Screw, Self-Tapping	41	0423-426	4	Washer
15	0402-450	1	● Plug, Magnetic (inc. 16)	42	8428-002	2	Nut, Lock
16	0423-153	1	● ● O-Ring	43	0423-315	3	Clamp, Fitting
17	0402-328	1	● Bearing	44	0410-049	AR	Hose, Vent
18	0502-123	1	● Gear, Pinion - Assembly - 10T (inc. 19-21)	45	0470-462	1	Fitting, Vent
19	0402-424	AR	● ● Shim	46	0623-101	1	Clip, Routing - Snap-In
	0402-425	AR	● ● Shim	47	0402-147	1	Bladder, Gearcase
	0402-426	AR	● ● Shim				
	0402-427	AR	● ● Shim				
	0402-428	AR	● ● Shim				

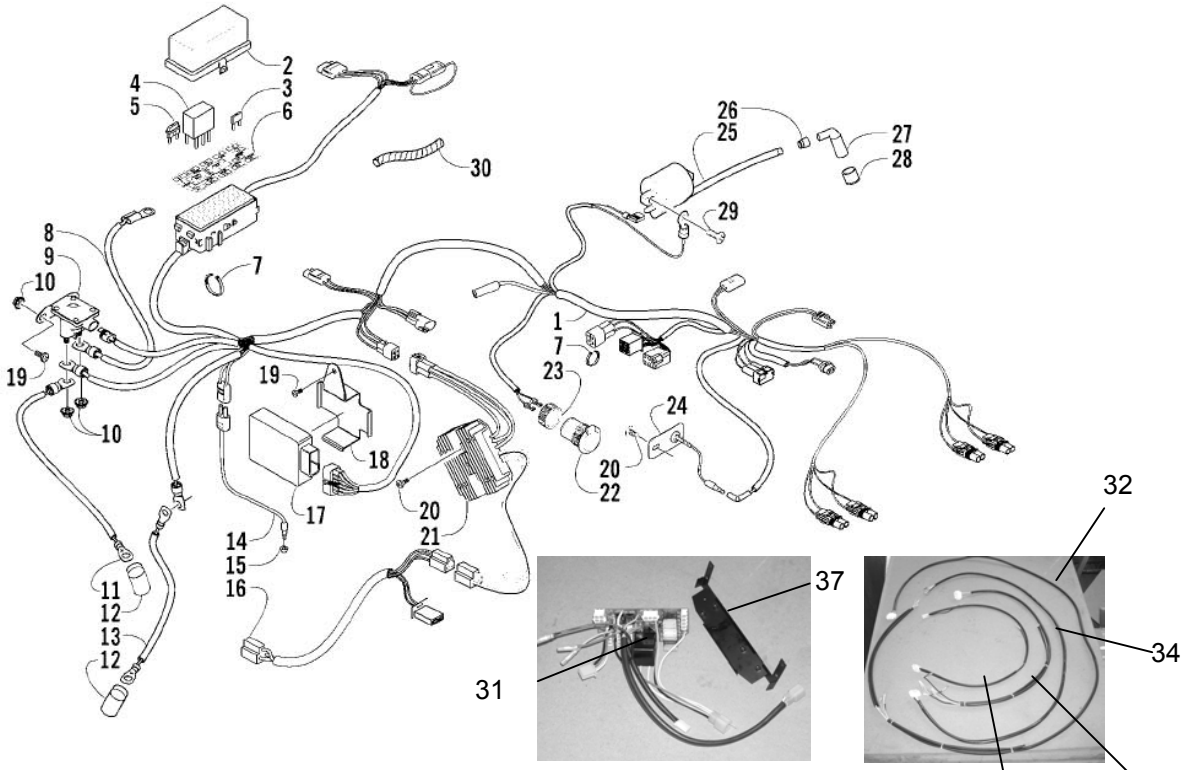

WIRING HARNESS ASSEMBLY

0738-505

Ref.	Part No.	Qty.	Description	Ref.	Part No.	Qty.	Description
1	0486-124	1	Harness, Main (inc. 2-6 and two No. 7)	15	0402-991	1	Retainer, Switch
2	0530-008	1	● Cover, Fuse Block	16	0486-126	1	Harness, Adapter - Electric Choke
3	0430-034	2	● Diode	17	3530-039	1	CDI Unit
4	0430-033	2	● Relay	18	0506-987	1	Bracket, CDI
5	0430-032	5	● Fuse - 10 Amp	19	8476-616	3	Screw, Machine
	0430-031	3	● Fuse - 15 Amp	20	8476-625	3	Screw, Machine
	0430-030	2	● Fuse - 30 Amp	21	3530-028	1	Regulator, Voltage
6	0411-585	1	● Decal, Fuse Block	22	0445-022	1	Receptacle, 12V (inc. 23)
7	0123-788	AR	● Cable Tie - 7.5 in.	23	0445-034	1	● Nut, Retainer
8	0445-019	1	Cable, Solenoid/Starter	24	0509-011	1	Diode Assembly
9	0645-414	1	Solenoid	25	3430-027	1	Coil, Ignition - Assembly
10	0623-038	4	Nut w/Washer	26	3430-009	1	Seal, High Tension Wire
11	0445-038	1	Cable, Battery/Solenoid	27	3430-007	1	Cap, Spark Plug
12	0645-019	2	Boot, Terminal	28	3430-008	1	Seal, Spark Plug
13	0445-037	1	Cable, Battery/Ground	29	8476-620	1	Screw, Machine
14	0409-009	1	Switch, Brake - Assembly	30	0716-507	AR	Loom, Protective
Homologated ATV´s							
31	AC000-183	1	E-box				
32	AC000-184	1	Cable harness, rear				
33	AC000-185	1	Cable harness, horn				
34	AC000-186	1	Cable harness, ignition				
35	AC000-187	2	Cable harness, headlight				
36	AC000-161	1	E-box cover				
37	AC000-188	1	Bracket e-box				

2004 500 TRV

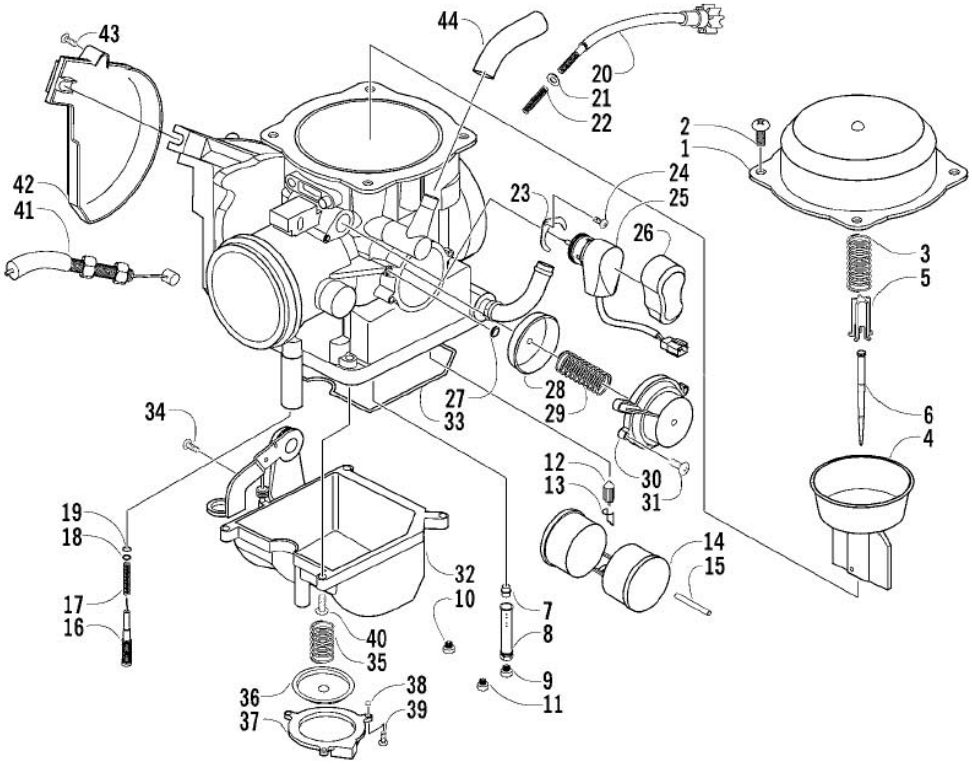

CARBURETOR

(Complete Assembly p/n 0470-471)

0738-926 *Not a Service Part **Optional

Ref.	Part No.	Qty.	Description	Ref.	Part No.	Qty.	Description
1	5507-001	1	Cover, Top	21	5507-028	1	Washer
2	5507-002	4	Screw, Top Cover	22	5507-029	1	Spring
3	5507-085	1	Spring	23	5507-115	1	Plate
4	5507-099	1	Piston, Vacuum	24	5507-117	1	Screw
5	5507-005	1	Seat, Spring	25	5507-113	1	Choke, Electric
6	5507-100	1	Jet Needle	26	5507-114	1	Cover, Electric Choke
7	5507-007	1	Needle Jet	27	5507-102	1	U-Ring
8	5507-047	1	Holder, Needle Jet	28	5507-116	1	Diaphragm Assembly
9	5507-041	1	Main Jet - 147	29	5507-104	1	Spring
	5507-086	1	Main Jet - 148**	30	5507-105	1	Cover
	5507-009	1	Main Jet - 150**	31	5507-106	2	Screw
	5507-043	1	Main Jet - 142**	32	5507-065	1	Chamber, Float - Assembly (inc. 33-39)
	5507-044	1	Main Jet - 140**	33	5507-067	1	● O-Ring, Float Chamber
10	5507-101	1	Slow Jet	34	5507-050	1	● Screw, Drain
11	5507-112	1	Starter Jet - 85	35	5507-032	1	● Spring
12	5507-107	1	Valve, Float - Set (inc. 13)	36	5507-031	1	● Diaphragm Assembly
13	*	1	● Clip	37	*	1	● Housing, Pump
14	5507-039	1	Float Set (inc. 15)	38	5507-034	1	● U-Ring
15	*	1	● Pin, Float	39	5507-035	3	● Screw
16	5507-111	1	Screw, Pilot Air - Set (inc. 17-19)	40	5507-017	4	Screw
17	*	1	● Spring	41	0487-021	1	Cable, Throttle
18	*	1	● Washer	42	5507-036	1	Cover
19	*	1	● O-Ring	43	5507-037	1	Screw
20	5507-027	1	Screw, Idle Adjust	44	0410-056	1	Hose, Vent

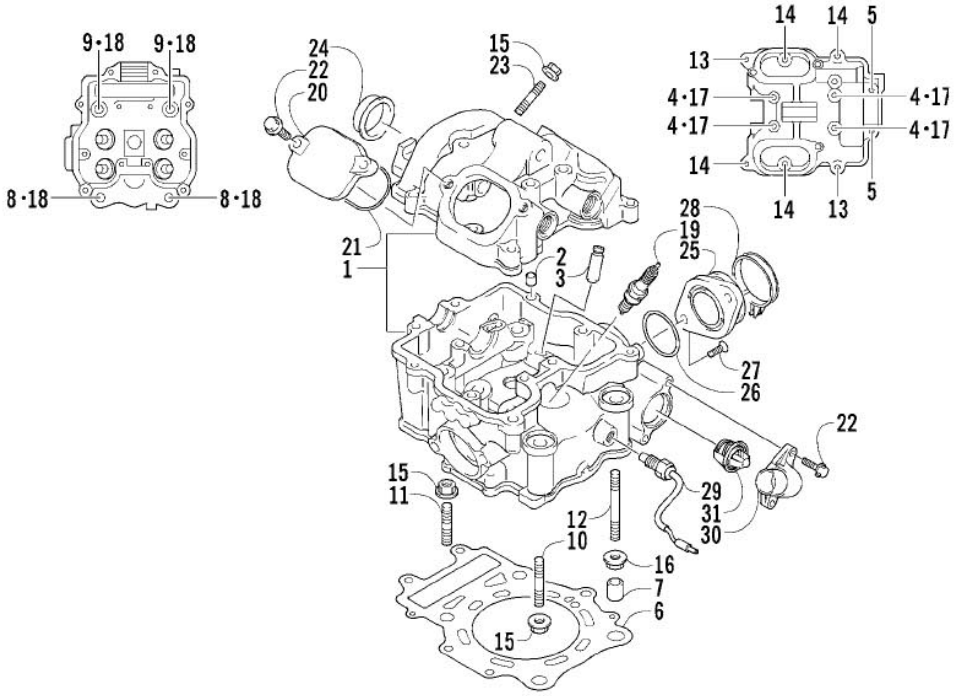

CYLINDER HEAD ASSEMBLY

0737-755 *Not Illustrated

Ref.	Part No.	Qty.	Description	Ref.	Part No.	Qty.	Description
1	3402-098	1	Head, Cylinder - Assembly (inc. 2-5)	17	3003-290	4	Gasket
2	3402-099	4	● Guide, Valve	18	3402-010	4	Gasket, Head Nut
3	3423-043	2	● Pin, Dowel	19	0217-632	1	Spark Plug (NGK CR6E)
4	3423-006	4	● Screw, Cap	20	3402-100	2	Cap, Inspection
5	3008-376	2	● Screw, Cap	21	3402-101	2	O-Ring
6	3402-362	1	Gasket, Cylinder Head	22	3004-341	5	Screw, Cap
7	3423-088	2	Pin, Dowel	23	3423-383	1	Bolt, Stud
8	3423-015	2	Screw, Cap	24	3402-035	1	Plug, Cylinder Head
9	3423-016	2	Screw, Cap	25	3402-706	1	Pipe, Intake - Assembly (inc. 26)
10	3423-089	2	Bolt, Stud	26	3423-353	1	● O-Ring
11	3423-087	2	Bolt, Stud	27	3423-347	2	Screw, Cap
12	3423-203	1	Bolt, Stud	28	0423-317	1	Clamp
13	3423-007	2	Screw, Cap	29	3530-038	1	Switch, Water Temperature - Assembly
14	3004-376	4	Screw, Cap	30	3413-004	1	Cover, Thermostat
15	3004-488	5	Nut	31	3413-012	1	Thermostat
16	3004-326	1	Nut	*	3402-048	1	Plug, Frost

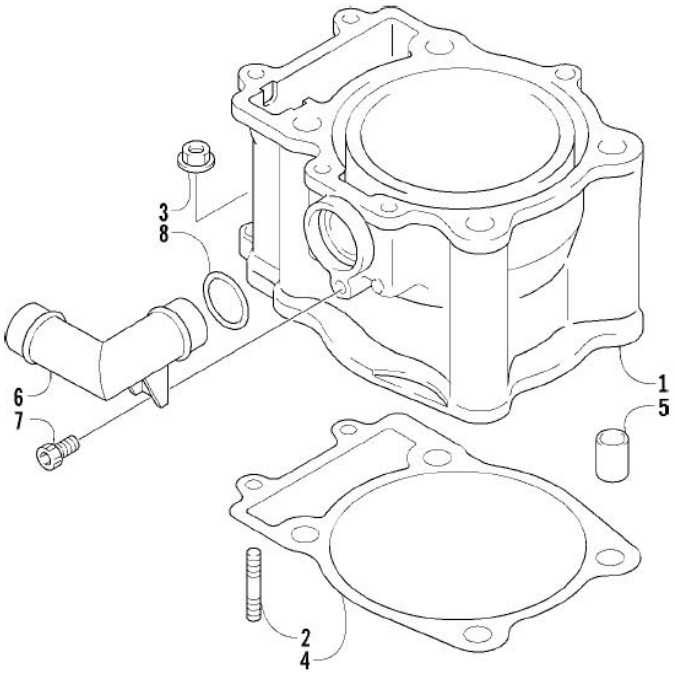

CYLINDER ASSEMBLY

0732-301

Ref.	Part No.	Qty.	Description	Ref.	Part No.	Qty.	Description
1	3402-707	1	Cylinder	5	3423-088	2	Pin, Dowel
2	3423-384	2	Bolt, Stud	6	3413-013	1	Union, Water Hose
3	3004-488	2	Nut	7	3423-121	1	Screw, Cap
4	3402-365	1	Gasket, Cylinder	8	3423-058	1	O-Ring

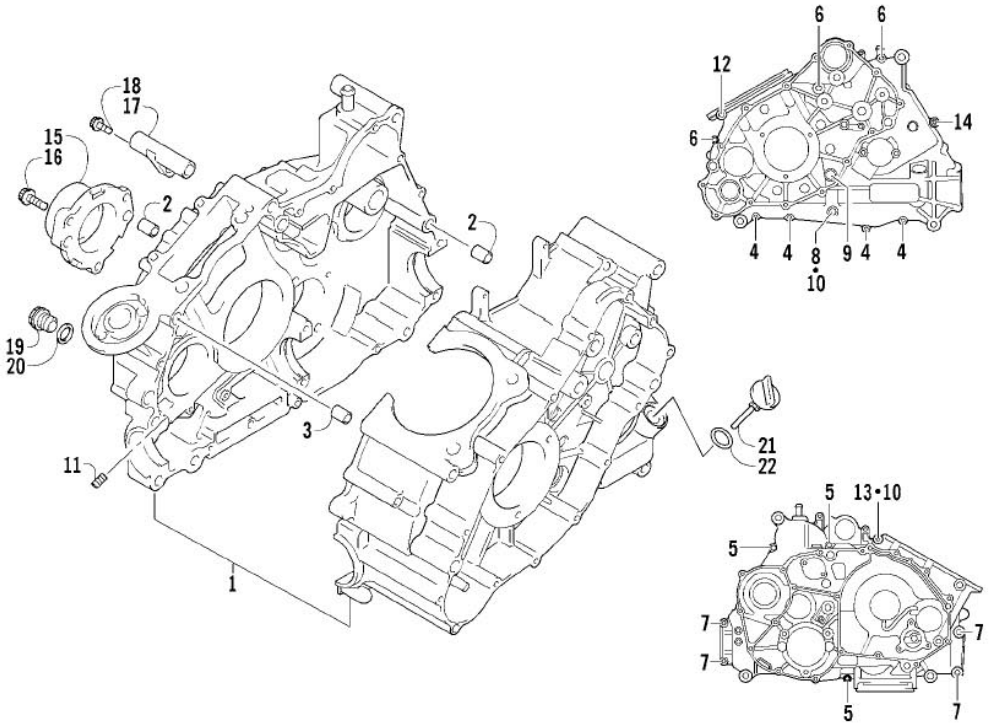

CRANKCASE ASSEMBLY

0737-757

Ref.	Part No.	Qty.	Description	Ref.	Part No.	Qty.	Description
1	3402-708	1	Crankcase Assembly (inc. two No. 2 and 3-14)	12	3423-387	1	● Bolt
2	3423-088	4	● Pin, Dowel	13	3423-388	1	● Bolt
3	3004-822	1	● Pin, Dowel	14	3423-308	1	● Bolt
4	3423-091	4	● Bolt	15	3402-439	1	Housing, Secondary Shaft Bearing
5	3423-119	3	● Bolt	16	3423-506	3	Bolt
6	3423-092	3	● Bolt	17	3402-437	1	Pipe, Breather
7	3004-880	4	● Bolt	18	3423-389	1	Bolt, Breather Pipe
8	3005-332	1	● Bolt	19	3402-214	1	Plug, Oil Pressure
9	3423-385	1	● Bolt	20	3402-012	1	Gasket, Oil Pressure Plug
10	3402-436	2	● Gasket	21	3402-438	1	Stick, Oil Level
11	3423-386	1	● Plug	22	3423-055	1	O-Ring, Oil Level Stick

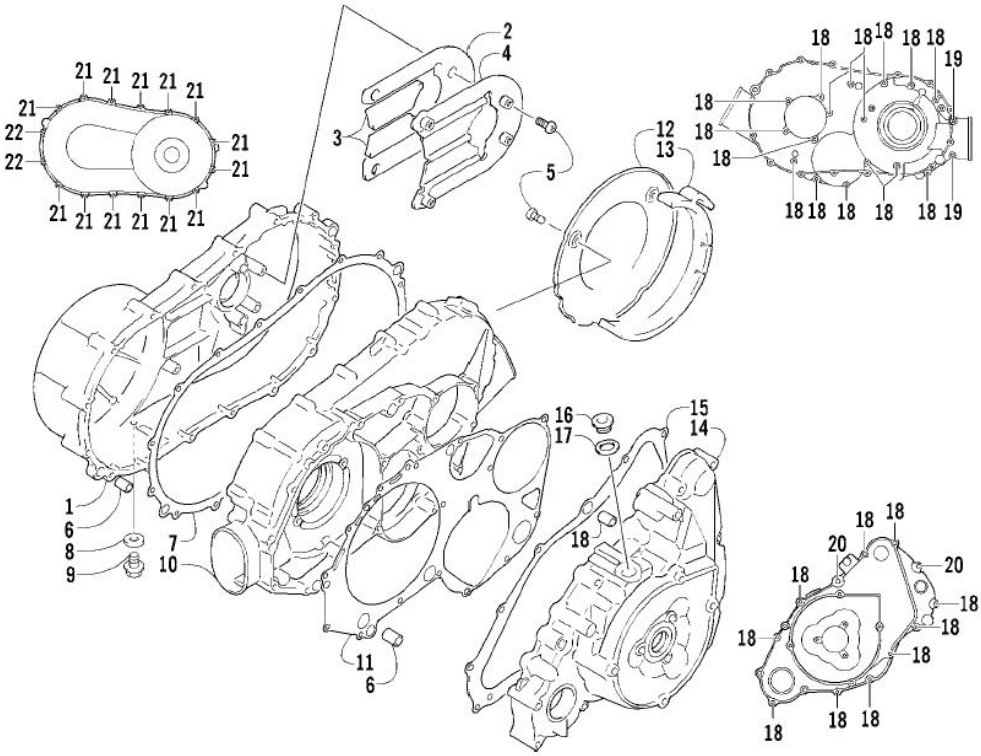

CLUTCH/V-BELT/MAGNETO COVER ASSEMBLY

0737-759

Ref.	Part No.	Qty.	Description	Ref.	Part No.	Qty.	Description
1	3402-710	1	Cover, V-Belt	12	3402-445	1	Plate, Air Intake
2	3402-711	1	Damper, V-Belt Cover	13	3402-699	1	Cushion, Air Intake Plate
3	3402-712	2	Damper, V-Belt Cover	14	3402-714	1	Cover, Magneto
4	3402-713	1	Plate, V-Belt Cover	15	3402-715	1	Gasket, Magneto Cover
5	3423-435	7	Screw	16	3402-041	1	Plug, Oil Filler
6	3423-088	6	Pin, Dowel	17	3402-013	1	Gasket, Oil Filler Plug
7	3402-443	1	Gasket, V-Belt Cover	18	3423-098	26	Bolt
8	3402-444	1	Gasket, Drain Plug	19	3423-092	2	Bolt
9	3004-705	1	Plug, Drain	20	3004-756	2	Bolt
10	3402-709	1	Cover, Clutch	21	3423-091	14	Bolt
11	3402-441	1	Gasket, Clutch Cover	22	3423-119	2	Bolt

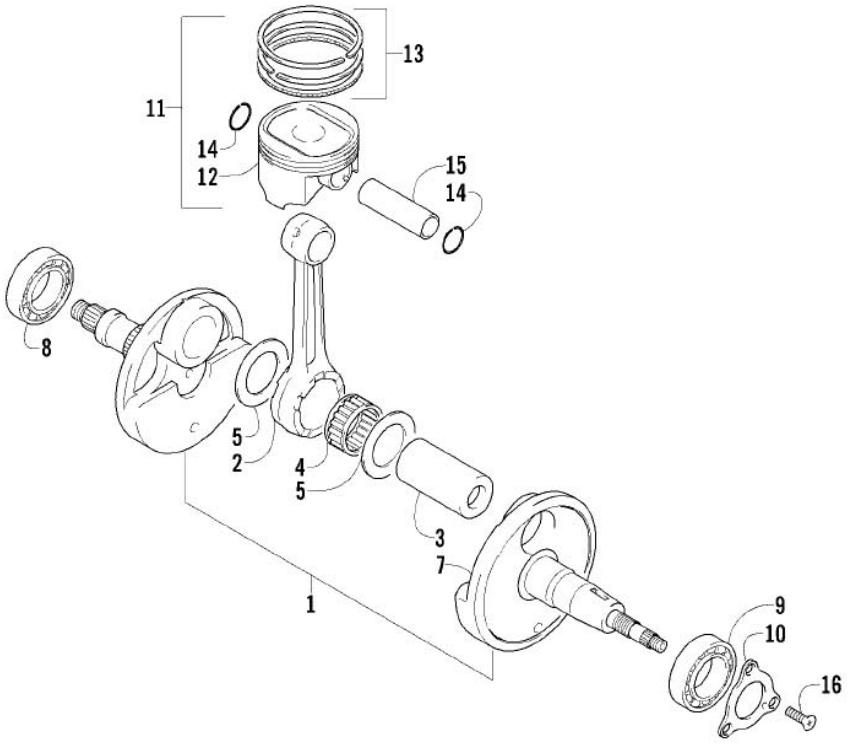

CRANKSHAFT ASSEMBLY

0737-077

Ref.	Part No.	Qty.	Description	Ref.	Part No.	Qty.	Description
1	3402-883	1	Crankshaft Assembly (inc. 2-7)	9	3402-054	1	Bearing - Left
2	3402-376	1	● Rod, Connecting	10	3402-188	1	Retainer, Oil Seal - Left
3	3402-377	1	● Pin, Crank	11	3402-788	1	Piston Set (inc. 12-14)
4	3402-717	1	● Bearing	12	3402-719	1	● Piston
5	3423-351	2	● Washer	13	3402-720	1	● Ring, Piston - Set
6	3402-834	1	● Crankshaft - Right	14	3423-344	2	● Circlip, Piston Pin
7	3402-705	1	● Crankshaft - Left	15	3402-375	1	Pin, Piston
8	3402-058	1	Bearing - Right	16	3423-018	3	Screw

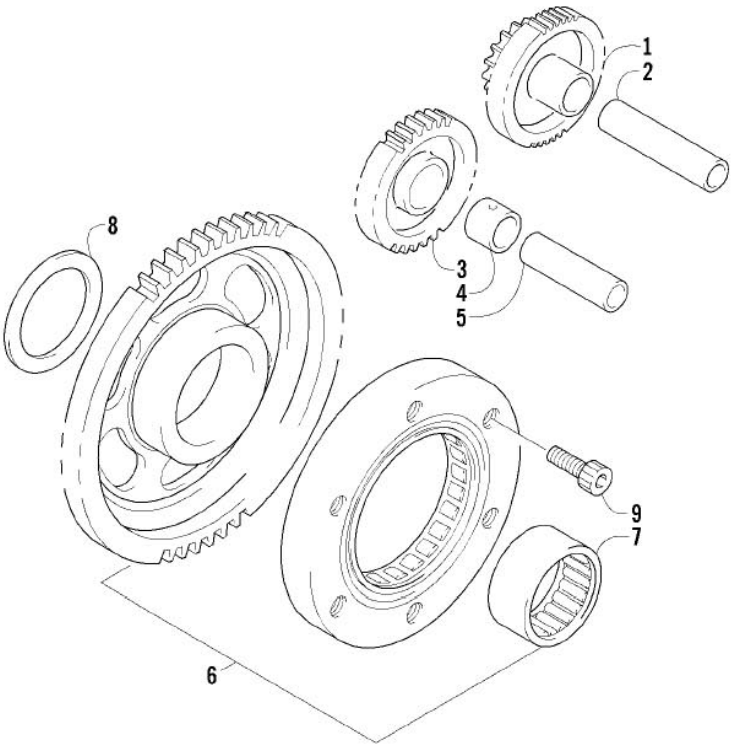

STARTER CLUTCH ASSEMBLY

0735-612

Ref.	Part No.	Qty.	Description	Ref.	Part No.	Qty.	Description
1	3402-813	1	Gear, Starter Idler - No. 1	6	3402-457	1	Clutch, Starter - Set (inc. 7)
2	3423-331	1	Pin	7	3402-063	1	● Bearing
3	3402-349	1	Gear, Starter Idler - No. 2	8	3423-104	1	Washer
4	3423-396	1	Spacer, Starter Idler Gear No. 2	9	3402-509	6	Screw, Cap
5	3423-397	1	Pin				

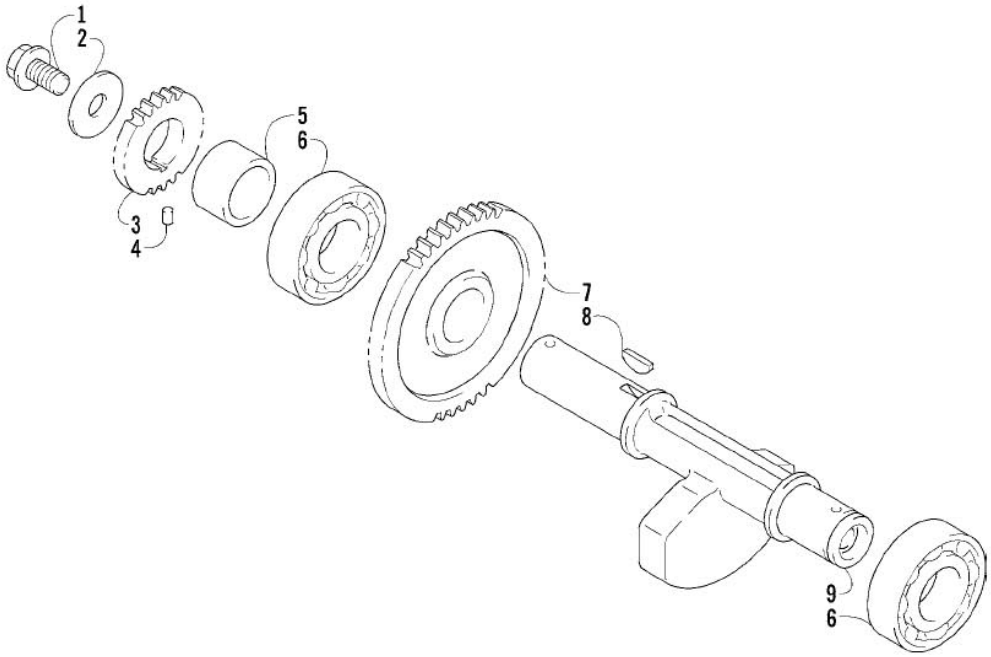

CRANK BALANCER ASSEMBLY

0737-762

Ref.	Part No.	Qty.	Description	Ref.	Part No.	Qty.	Description
1	3423-555	1	Bolt	6	3402-050	2	Bearing
2	3423-401	1	Washer	7	3402-722	1	Gear, Driven
3	3402-390	1	Gear, Oil Pump Drive	8	3004-540	1	Key
4	3423-110	1	Pin	9	3402-458	1	Balancer, Crank
5	3402-461	1	Spacer				

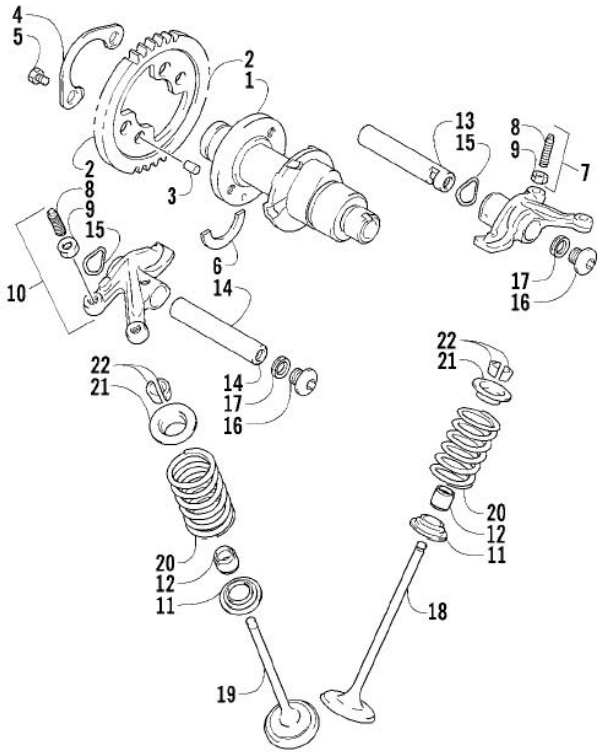

CAMSHAFT/VALVE ASSEMBLY

0737-800

Ref.	Part No.	Qty.	Description	Ref.	Part No.	Qty.	Description
1	3402-723	1	Camshaft	11	3402-148	4	Seat, Spring
2	3402-352	1	Sprocket	12	3402-078	4	Seal, Oil
3	3423-047	1	Pin	13	3402-140	1	Shaft, Rocker Arm
4	3423-073	1	Washer	14	3402-141	1	Shaft, Rocker Arm
5	3423-013	2	Bolt	15	3423-031	2	Washer
6	3423-071	1	C-Ring	16	3402-040	2	Plug, Shaft
7	3402-805	1	Arm, Valve Rocker - Intake (inc. two No. 8-9)	17	3402-012	2	Gasket
				18	3402-725	2	Valve, Intake
8	3423-075	4	● Screw	19	3402-143	2	Valve, Exhaust
9	3423-076	4	● Nut	20	3402-726	4	Spring, Valve
10	3402-139	1	Arm, Valve Rocker - Exhaust (inc. two No. 8-9)	21	3423-541	4	Retainer, Spring
				22	3402-147	8	Cotter, Valve

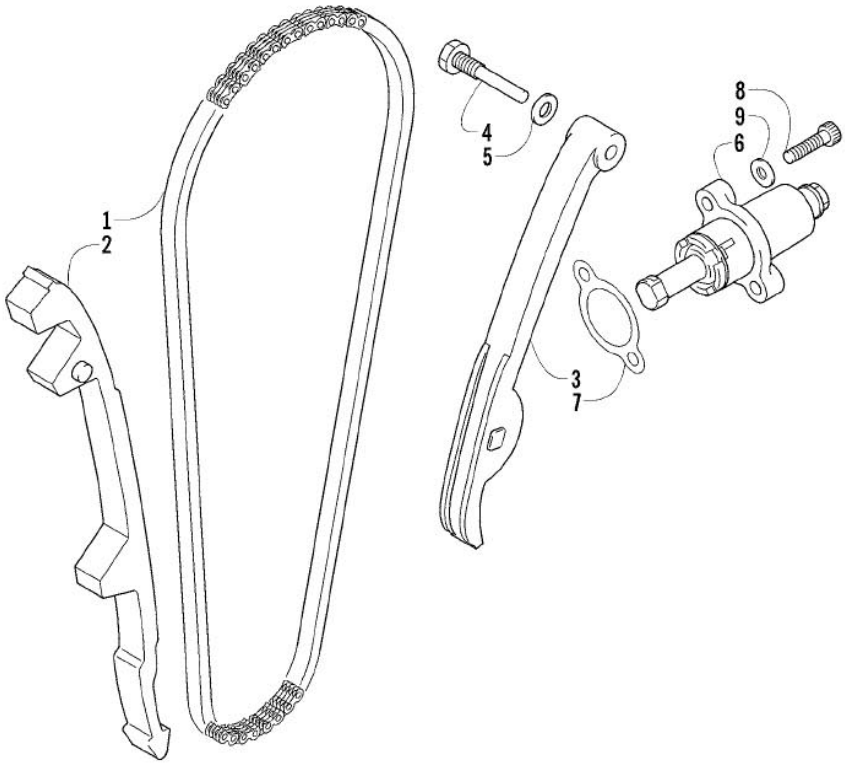

CAM CHAIN ASSEMBLY

0732-308

Ref.	Part No.	Qty.	Description	Ref.	Part No.	Qty.	Description
1	3402-353	1	Chain, Cam	6	3402-136	1	Adjuster, Tensioner - Assembly
2	3402-355	1	Guide, Chain	7	3402-137	1	Gasket
3	3402-356	1	Tensioner, Chain	8	3004-475	2	Screw, Cap
4	3423-074	1	Bolt	9	3003-290	2	Gasket
5	3003-188	1	Washer				

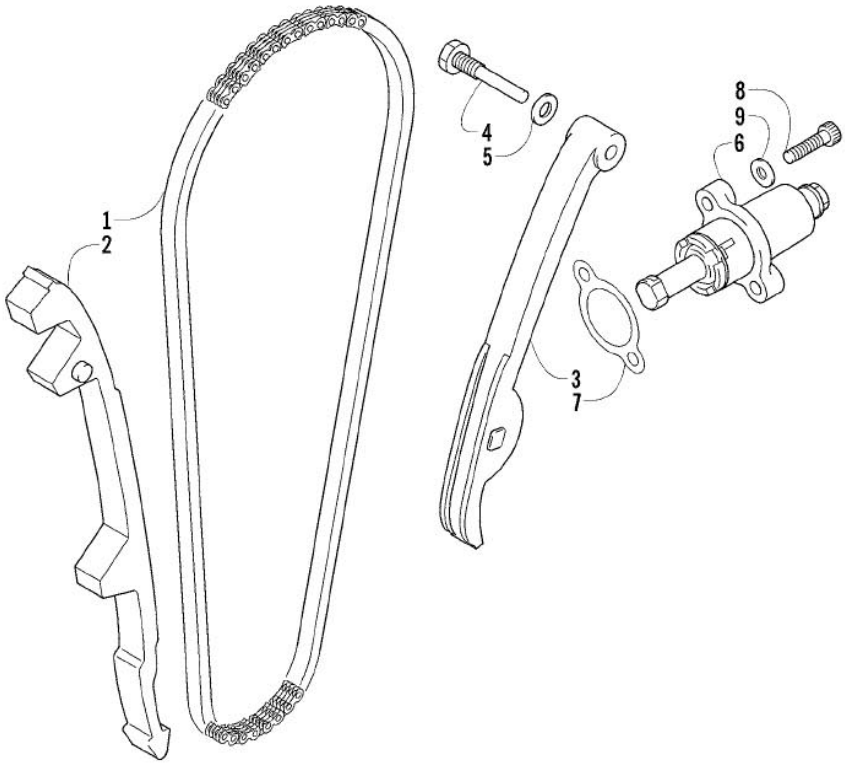

CAM CHAIN ASSEMBLY

0732-308

Ref.	Part No.	Qty.	Description	Ref.	Part No.	Qty.	Description
1	3402-353	1	Chain, Cam	6	3402-136	1	Adjuster, Tensioner - Assembly
2	3402-355	1	Guide, Chain	7	3402-137	1	Gasket
3	3402-356	1	Tensioner, Chain	8	3004-475	2	Screw, Cap
4	3423-074	1	Bolt	9	3003-290	2	Gasket
5	3003-188	1	Washer				

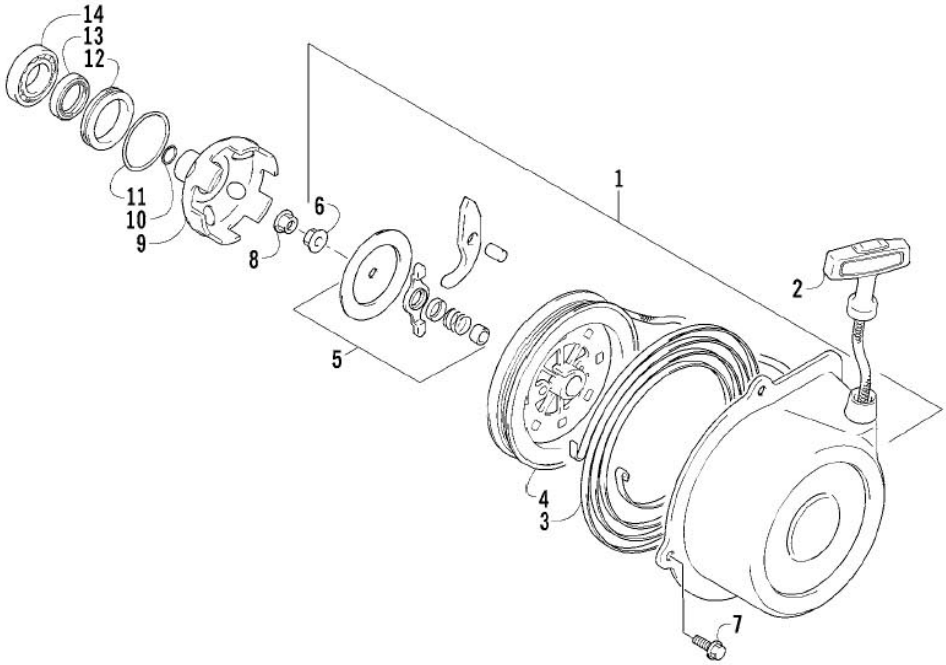

RECOIL STARTER ASSEMBLY

0737-764

Ref.	Part No.	Qty.	Description	Ref.	Part No.	Qty.	Description
1	3445-003	1	Starter, Recoil - Assembly (inc. 2-6)	8	3004-491	1	Nut
2	3445-011	1	● Rope Assembly	9	3445-029	1	Cup, Starter
3	3445-007	1	● Spring, Spiral	10	3423-053	1	O-Ring
4	3445-004	1	● Reel	11	3423-063	1	O-Ring
5	3445-016	1	● Ratchet Assembly	12	3402-119	1	Spacer
6	3004-488	1	● Nut	13	3402-070	1	Seal, Oil
7	3423-428	4	Screw, Cap	14	3402-051	1	Bearing

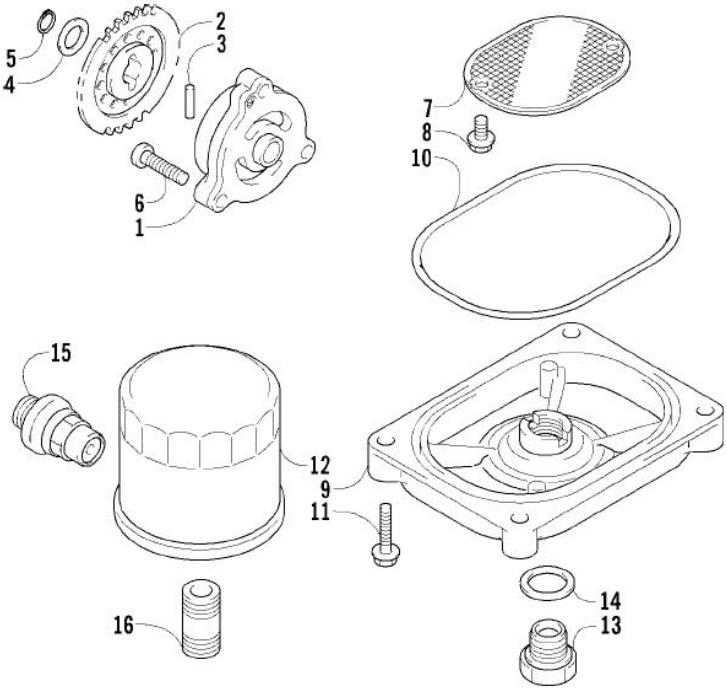

OIL FILTER/PUMP ASSEMBLY

0737-765

Ref.	Part No.	Qty.	Description	Ref.	Part No.	Qty.	Description
1	3402-727	1	Pump, Oil	9	3402-157	1	Cap, Oil Strainer
2	3402-463	1	Gear, Driven	10	3423-077	1	O-Ring
3	3423-046	1	Pin	11	3004-756	4	Screw, Cap
4	3423-443	1	Washer	12	0436-146	1	Filter, Oil
5	3423-184	1	Circlip	13	3402-036	1	Plug, Drain
6	3423-510	3	Screw, Cap	14	3402-012	1	Gasket, Drain Plug
7	3402-156	1	Strainer, Oil	15	3402-154	1	Valve, Oil Relief - Assembly
8	0693-389	2	Screw, Cap	16	3402-158	1	Union, Oil Filter

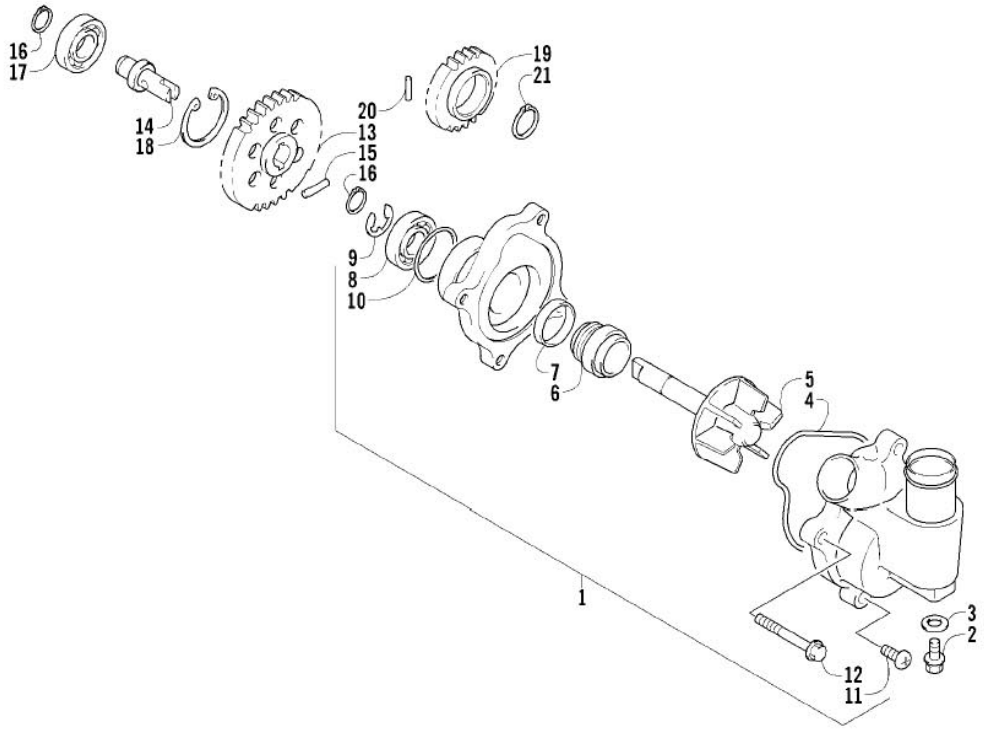

WATER PUMP ASSEMBLY

0737-766

Ref.	Part No.	Qty.	Description	Ref.	Part No.	Qty.	Description
1	3402-464	1	Pump, Water - Assembly (inc. 2-11)	12	3423-308	2	Screw, Cap
2	3423-343	1	● Screw, Cap	13	3402-026	1	Gear, Driven
3	3003-188	1	● Gasket	14	3402-466	1	Shaft, Driven Gear
4	3423-402	1	● O-Ring	15	3423-046	1	Pin, Driven Gear
5	3413-014	1	● Impeller/Shaft	16	3423-184	2	Circlip, Driven Gear
6	3005-909	1	● Seal, Mechanical	17	3402-467	1	Bearing, Shaft
7	3402-465	1	● Seal, Oil	18	3423-405	1	Circlip, Shaft Bearing
8	3003-615	1	● Bearing	19	3402-390	1	Gear, Water Pump Drive
9	3423-403	1	● E-Ring	20	3423-110	1	Pin, Drive Gear
10	3423-404	1	● O-Ring	21	3423-189	1	Circlip, Drive Gear
11	3003-484	2	● Screw				

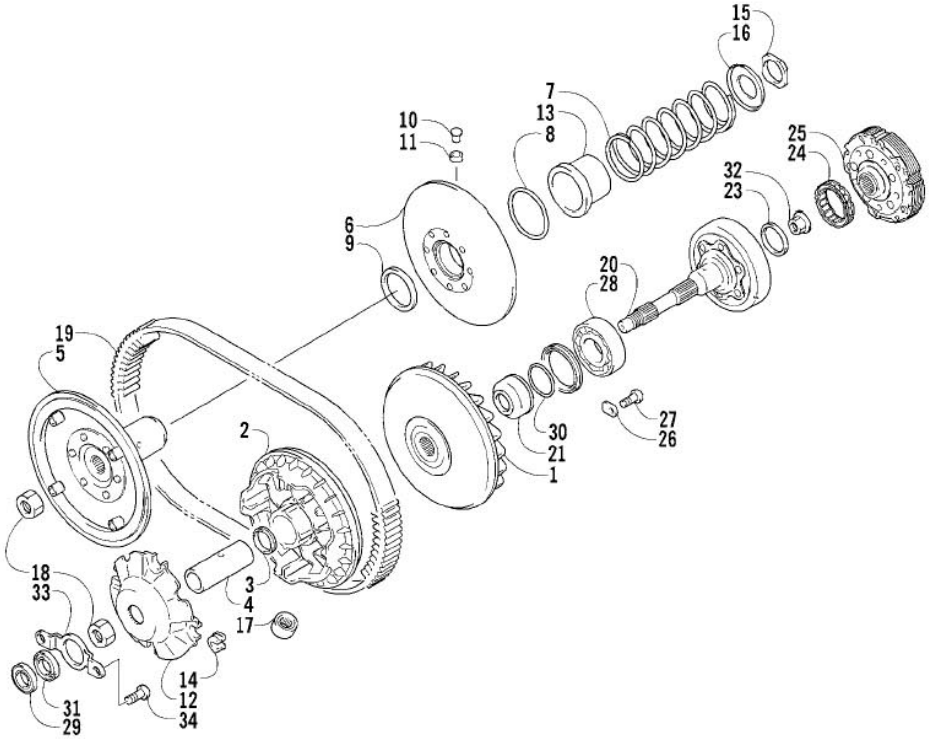

TRANSMISSION ASSEMBLY

0737-771

Ref.	Part No.	Qty.	Description	Ref.	Part No.	Qty.	Description
1	3402-750	1	Face, Fixed Drive	18	3423-514	2	Nut
2	3402-751	1	Face, Movable Drive	19	3402-757	1	V-Belt
3	3402-470	2	Seal, Movable Drive Face	20	3402-758	1	Housing, Clutch
4	3402-471	1	Spacer, Movable Drive Face	21	3402-544	1	Spacer, Fixed Drive Face
5	3402-752	1	Face, Fixed Driven	22	3402-808	1	Seal, Clutch Housing - Center
6	3402-753	1	Face, Movable Driven	23	3402-488	1	Seal, Clutch Housing - Left
7	3402-474	1	Spring, Movable Driven Face	24	3446-003	1	Clutch, One Way
8	3402-475	2	O-Ring, Movable Driven Face	25	3402-760	1	Shoe, Clutch - Assembly
9	3402-476	2	Seal, Movable Driven Face	26	3446-031	2	Retainer, Bearing
10	3402-477	4	Pin, Movable Driven Face	27	3423-435	2	Screw, Bearing Retainer
11	3402-478	4	Spacer, Movable Driven Face	28	3402-567	1	Bearing
12	3402-755	1	Plate, Movable Drive Face	29	3402-729	1	Bearing
13	3402-756	1	Sleeve, Movable Driven Face	30	3423-353	1	O-Ring
14	3402-481	4	Damper, Movable Drive Face	31	3402-761	2	Seal, Clutch Housing - Right
15	3423-406	1	Nut, Driven Pulley	32	3423-501	1	Nut
16	3402-482	1	Holder, Movable Driven Face Spring	33	3402-730	1	Retainer, Bearing
17	3402-483	8	Roller, Movable Drive Face	34	3423-018	2	Screw

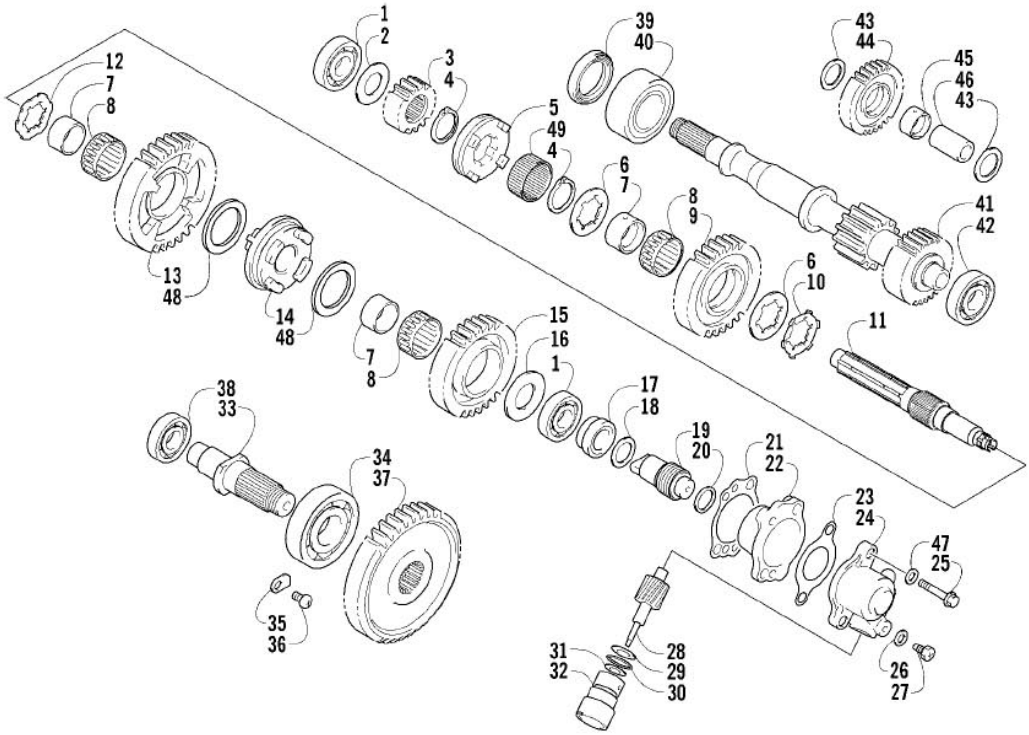

SECONDARY TRANSMISSION ASSEMBLY

0738-592

Ref.	Part No.	Qty.	Description	Ref.	Part No.	Qty.	Description
1	3402-045	2	Bearing, Shaft	26	3402-009	1	Washer, Driven Gear
2	3402-381	1	Washer, Drive Gear No. 2 - Right	27	3423-143	1	Screw, Driven Gear
3	3402-497	1	Gear, Drive - No. 2	28	3402-509	1	Gear, Speedometer Driven
4	3423-066	2	Circlip	29	3423-144	1	Washer, Driven Gear
5	3402-821	1	Dog, Reverse Driven Gear	30	3423-056	1	O-Ring
6	3423-263	2	Washer	31	3402-077	1	Seal, Driven Gear
7	3402-494	3	Bushing	32	3446-058	1	Sleeve
8	3402-498	3	Bearing	33	3402-835	1	Shaft, Output
9	3402-822	1	Gear, Reverse Driven	34	3402-502	1	Bearing, Output Shaft
10	3423-266	1	Washer, Lock	35	3446-031	2	Retainer, Bearing
11	3402-820	1	Countershaft	36	3423-435	2	Screw, Bearing Retainer
12	3423-262	1	Washer, Lock	37	3402-534	1	Gear, Driven - No. 2
13	3402-668	1	Gear, Driven - Low	38	3402-735	1	Bearing, Shaft
14	3402-824	1	Dog, Sliding	39	3402-537	1	Seal, Driveshaft - Left
15	3402-733	1	Gear, Driven - High	40	3402-499	1	Bearing, Driveshaft - Right
16	3423-412	1	Washer, Drive Gear - Left	41	3402-731	1	Driveshaft
17	1406-217	1	Spacer, Driven Gear	42	3003-261	1	Bearing, Driveshaft - Left
18	3423-146	1	Washer, Drive Gear - Center	43	3402-195	2	Washer, Reverse Idle Gear
19	3402-508	1	Gear, Speedometer Drive	44	3402-503	1	Gear, Reverse Idle
20	3423-145	1	Washer, Drive Gear - Right	45	3446-103	1	Bushing, Reverse Idle Gear
21	3446-289	1	Gasket	46	3402-507	1	Shaft, Reverse Idle
22	3446-288	1	Joint, Speedometer Gear	47	3003-290	2	Gasket
23	3446-244	1	Gasket	48	3423-554	2	Washer, Driven Gear
24	3446-057	1	Housing, Speedometer Gear	49	3402-825	1	Spacer, Reverse Driven Gear
25	3423-307	2	Bolt, Housing				

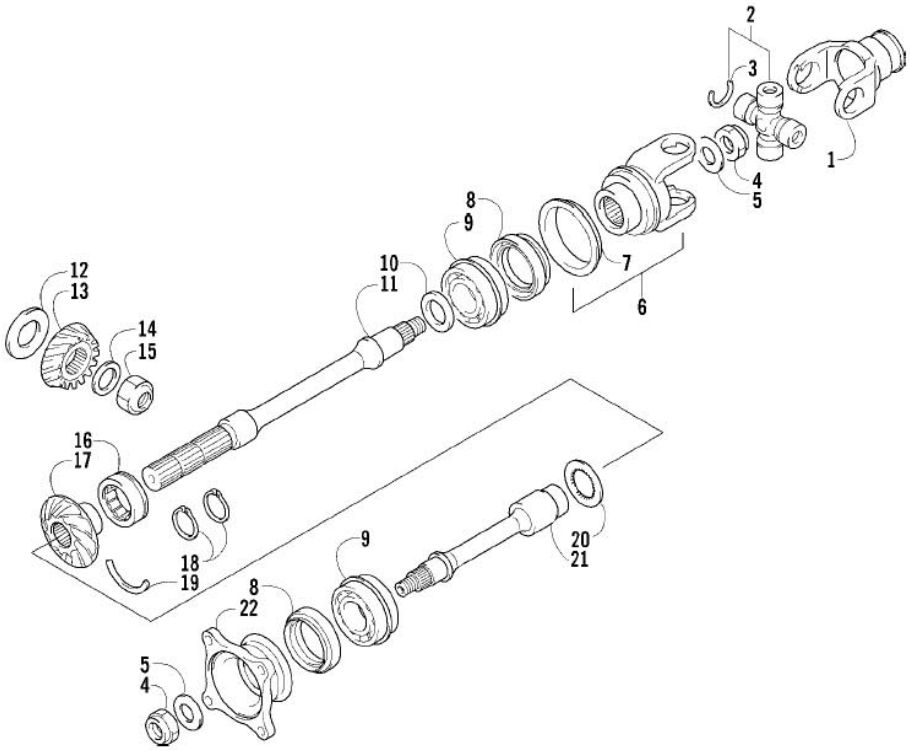

SECONDARY DRIVE ASSEMBLY

0738-922

Ref.	Part No.	Qty.	Description	Ref.	Part No.	Qty.	Description
1	3402-744	1	Yoke, Propeller Shaft Joint	11	3402-740	1	Shaft, Secondary Driven - Front
2	3402-562	1	Joint, Universal - Set (inc. 3)	12	3446-035	1	Shim, Secondary Drive Gear - Set
3	3423-479	4	● Circlip	13	3402-738	1	Gear, Secondary Drive
4	3423-025	2	Nut, Rear Output Joint	14	3005-372	1	Washer
5	3423-028	2	Washer, Rear Output Flange	15	3423-023	1	Nut
6	3402-742	1	Yoke, Drive Output - Front (inc. 7)	16	3402-515	1	Bearing, Driven Gear
7	3402-743	1	● Plate, Output Yoke	17	3402-739	1	Gear, Secondary Driven
8	3402-072	2	Seal, Oil - Driven Shaft	18	3423-340	2	Circlip, Secondary Driven Gear
9	3402-067	2	Bearing, Driven Shaft	19	3423-072	1	Ring, Driven Bearing
10	3402-017	AR	Shim, 25 x 34 x 0.60 mm	20	3423-415	1	Washer, Driven Shaft
	3402-018	AR	Shim, 25 x 34 x 0.65 mm	21	3402-513	1	Shaft, Secondary Driven - Rear
	3402-019	AR	Shim, 25 x 34 x 0.70 mm	22	3402-514	1	Flange, Output Joint - Rear
	3402-020	AR	Shim, 25 x 34 x 0.75 mm				
	3402-021	AR	Shim, 25 x 34 x 0.80 mm				
	3402-022	AR	Shim, 25 x 34 x 0.85 mm				
	3402-023	AR	Shim, 25 x 34 x 0.90 mm				
	3402-024	AR	Shim, 25 x 34 x 0.95 mm				
	3402-025	AR	Shim, 25 x 34 x 1.00 mm				
	3402-028	AR	Shim, 25 x 34 x 1.05 mm				
	3402-029	AR	Shim, 25 x 34 x 1.10 mm				
	3402-030	AR	Shim, 25 x 34 x 1.15 mm				
	3402-031	AR	Shim, 25 x 34 x 1.20 mm				

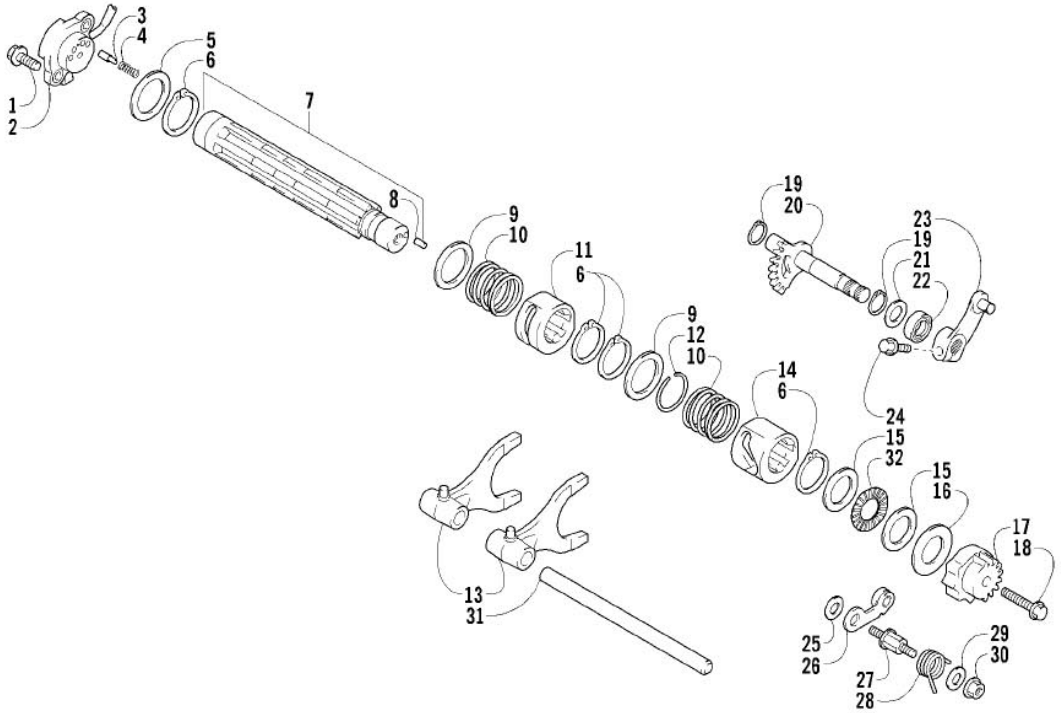

GEAR SHIFTING ASSEMBLY

0737-777

Ref.	Part No.	Qty.	Description	Ref.	Part No.	Qty.	Description
1	3423-418	2	Bolt	17	3402-642	1	Plate, Gear Shift Cam
2	3530-042	1	Base, Gear Shift - Assembly	18	3004-376	1	Bolt, Gear Shift Cam Plate
3	3423-044	2	Contact	19	3423-358	2	Circlip, Sub-Gear Shift Shaft
4	3402-087	2	Spring	20	3402-747	1	Shaft, Sub-Gear Shift
5	3423-421	1	Washer, Shift Shaft	21	1691-043	2	Washer, Sub-Gear Shift Shaft
6	3423-191	4	Circlip, Cam Spring	22	3402-076	1	Seal, Sub-Gear Shift Shaft
7	3402-826	1	Shaft, Gear Shift (inc. 8)	23	3402-434	1	Arm, Select
8	3423-114	1	● Pin	24	3004-341	1	Bolt, Select Arm
9	3402-382	2	Washer, Cam Spring	25	3423-141	1	Washer, Cam Stopper
10	3446-280	2	Spring, Cam	26	3402-746	2	Stopper, Cam
11	3402-827	1	Cam, Reverse	27	3446-048	1	Support, Cam Stopper
12	3423-416	1	C-Ring, Cam	28	3423-511	1	Spring, Cam Stopper
13	3446-353	2	Fork, Shift	29	3423-438	2	Washer, Cam Stopper Spring
14	3402-828	1	Cam, Gear Shift	30	3004-488	1	Nut, Cam Stopper Spring
15	3402-381	2	Washer, Shift Shaft	31	3446-266	1	Shaft, Shift Fork
16	3423-446	1	Washer, Gear Shift Cam Plate	32	3402-829	1	Bearing

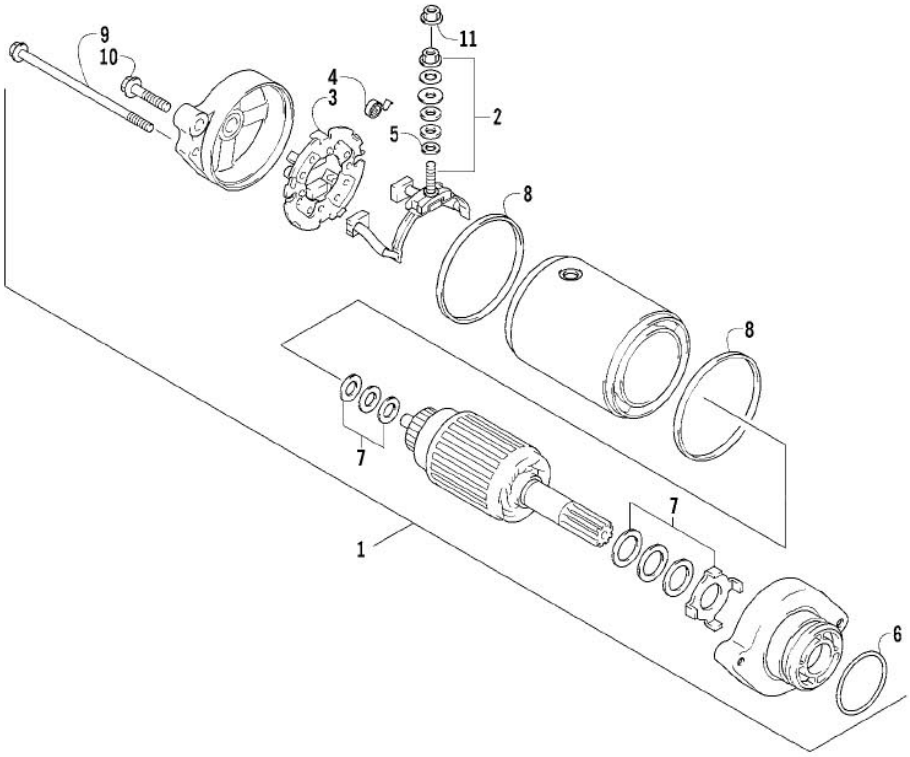

STARTER MOTOR ASSEMBLY

0737-779

Ref.	Part No.	Qty.	Description	Ref.	Part No.	Qty.	Description
1	3545-015	1	Motor, Starter Assembly (inc. 2-9)	7	3436-001	1	● Washer Set
2	3008-094	1	● Terminal Set, Brush	8	3008-553	2	● O-Ring
3	3008-095	1	● Holder Set, Brush	9	3423-085	2	● Through-Bolt
4	3008-096	4	● Spring, Brush	10	3423-162	2	Screw, Cap
5	3008-164	1	● O-Ring	11	3423-195	1	Nut
6	3423-084	1	● O-Ring				

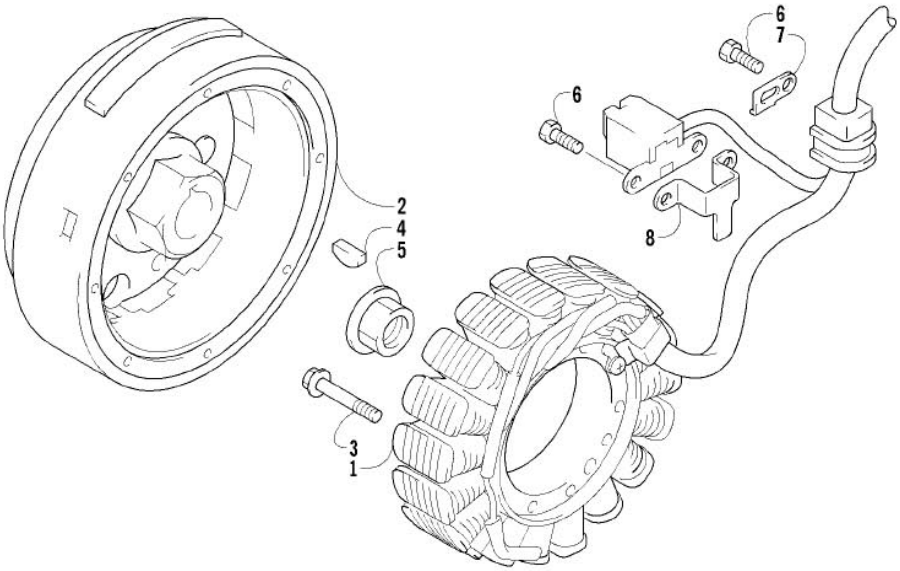

MAGNETO ASSEMBLY

0737-780

Ref.	Part No.	Qty.	Description	Ref.	Part No.	Qty.	Description
1	3430-058	1	Stator Assembly	5	3423-086	1	Nut
2	3430-046	1	Rotor/Flywheel	6	3423-005	3	Bolt
3	3423-162	3	Bolt	7	3430-006	1	Clamp (No. 1)
4	0691-785	1	Key	8	3430-005	1	Clamp (No. 2)

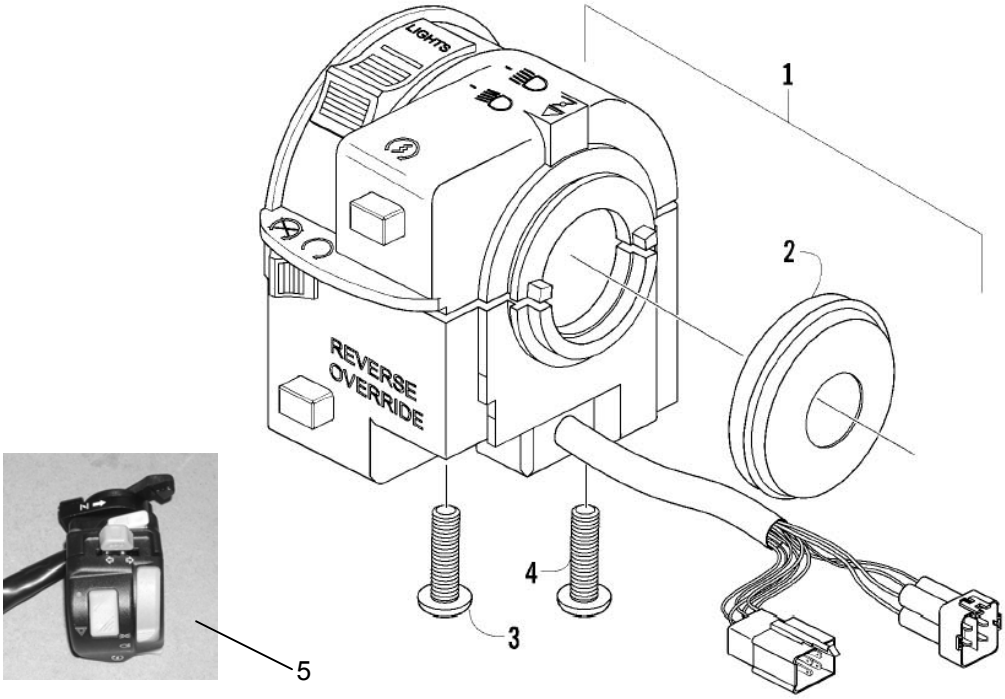

CONTROL SWITCH HOUSING ASSEMBLY

0738-459

Ref.	Part No.	Qty.	Description	Ref.	Part No.	Qty.	Description
1	0509-014	1	Switch, Control - Assembly (inc. 2-4)	3	0409-028	1	● Screw
2	3409-019	1	● Cover, Choke Lever	4	0409-027	1	● Screw, Cap
Homologated ATV´s							
5	AC000-179	1	Switch, combinated				

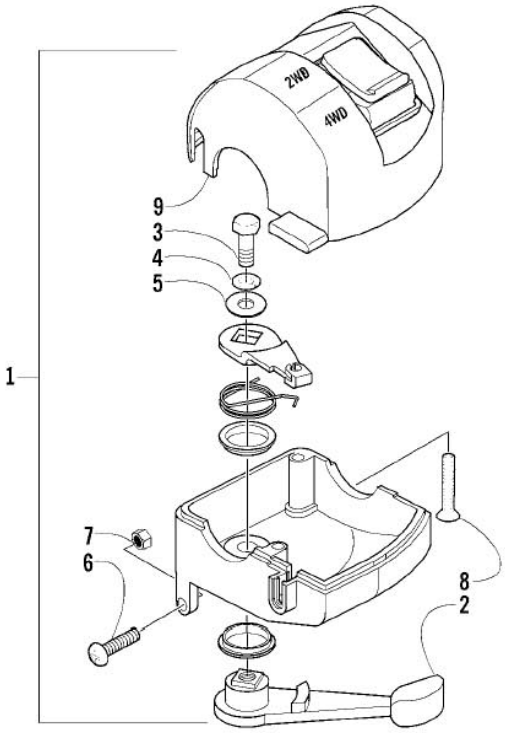

THROTTLE CASE ASSEMBLY

0738-414

Ref.	Part No.	Qty.	Description	Ref.	Part No.	Qty.	Description
1	0509-012	1	Case, Throttle - Assembly (inc. 2-9)	6	3423-014	1	● Screw
2	3409-001	1	● Lever	7	3423-327	1	● Nut
3	3004-533	1	● Screw, Cap	8	3423-199	2	● Screw
4	3004-447	1	● Washer, Lock	9	0409-048	1	● Cover, Throttle Case w/Switch
5	3003-030	1	● Washer				

RELATED ITEMS

2004 500 TRV

Red - (Model No. A2004TDM4BUSR) Green - (Model No. A2004TDM4BUSG)
Cat Green - (Model No. A2004TDM4BUSZ)

0436-337	Bag, Rack, Front, Black
0436-185	Bag, Tank, Black
0436-480	Bar, Utility - MRP
0436-502	Brush Guard/Bumper - Deluxe
0436-454	Cargo Box
0436-516	Cargo Box Light Mount, Portable
0436-498	Cargo Box Quick-Release Kit - MRP
0436-485	Cargo Box Solid Mounting Kit - MRP
0436-459	Carryall (9x12) - MRP
0436-460	Carryall (11x17) - MRP
0436-462	Carryall (10 D) - MRP
0436-477	Cord Reel - MRP
0436-087	Electrical Plug
0436-035	Engine Block Heater
0436-466	Fender Box - MRP
0436-467	Gear Cradle - MRP
0436-464	Grill Cradle - MRP
0436-352	Hand/Thumb Warmers
0436-103	Hourmeter
2256-950	Illustrated Parts Manual
0436-463	Light Bar - MRP
0436-122	Lunch Pack, Black
2256-939	Manuel d'utilisation (F)
2256-938	Operator's Manual (E)
0652-024	Paint, Metal - Black
0436-475	Rack Basket - MRP
0436-014	Safety Flag
0436-386	Snowplow Attachment Kit
0436-228	Snowplow Blade, 50 in. - Straight
0436-287	Snowplow Blade, 50 in. - One-Way
0436-296	Snowplow Blade, 60 in. - Straight
0436-360	Snowplow Blade, 60 in. - One-Way
0436-356	Snowplow, Push Frame
0436-040	Spotlight, Portable
0436-026	Tire Chains, Size B (24 in. and 25 in. Tires)
0436-027	Tire Chains, Size C (26 in. Tires)
1402-028	Tire, Titan AT589 (25x8-12, Mud & Snow)
0402-563	Tire, Titan AT589 (25x10-12, Mud & Snow)
0436-068	Winch Accessories Kit
0436-329	Winch Kit, 2500 lb
0436-361	Winch Mounting Kit
0436-303	Windshield, Clear
0436-301	Windshield, Clear w/Accent
0436-470	Workbase (8 in.) - MRP
0436-039	Worklight, Portable

■ **NOTE: For a complete list of related items, refer to the current accessory catalog.**

ARCTIC CAT®

Printed in U.S.A. **p/n 2256-950**