2012 ATV

Illustrated Parts Manual

550 TRV GT EFT

Model Number A2012TG01PETU

ARCTIC CAT®
SHARE OUR PASSION.™

TABLE OF CONTENTS

2012 ATV 550 TRV GT EFT

Orange (Model No. A2012TGO1PETU)

FRONT RACK, BODY PANEL, AND HEADLIGHT ASSEMBLIES 1
REAR BODY PANEL, FOOTWELL, AND TAILLIGHT ASSEMBLIES 2
REAR RACK ASSEMBLY 3
FRAME AND RELATED PARTS 4
WINCH ASSEMBLY 5
LICENSE PLATE HOLDER ASSEMBLY 6
SEAT ASSEMBLY 7
PASSENGER SEAT AND BACKREST ASSEMBLY 8
STEERING ASSEMBLY 9
HANDLEBAR ASSEMBLY 10
INSTRUMENT POD ASSEMBLY 11
FRONT SUSPENSION ASSEMBLY 12
REAR SUSPENSION ASSEMBLY 13
WHEEL AND TIRE ASSEMBLY 14
HYDRAULIC BRAKE ASSEMBLY 15
PARKING BRAKE ASSEMBLY 16
GAS TANK ASSEMBLY 17
SHIFT LEVER ASSEMBLY 18
AIR INTAKE ASSEMBLY 19
ENGINE AND EXHAUST 20
COOLING ASSEMBLY 21
CASE/BELT COOLING ASSEMBLY 22
DRIVE TRAIN ASSEMBLY 23
FRONT DRIVE GEARCASE ASSEMBLY 24
REAR DRIVE GEARCASE ASSEMBLY 25
WIRING HARNESS ASSEMBLY 26
BATTERY AND STARTER ASSEMBLY 27
THROTTLE BODY ASSEMBLY 28
CYLINDER ASSEMBLY 29
CYLINDER HEAD AND CAMSHAFT/VALVE ASSEMBLY 30
CAM CHAIN ASSEMBLY 31
CRANKCASE ASSEMBLY 32
CRANKSHAFT AND PISTON ASSEMBLY 33
CLUTCH/V-BELT/MAGNETO COVER ASSEMBLY 34
STARTER CLUTCH ASSEMBLY 35
CRANK BALANCER ASSEMBLY 36
OIL FILTER/PUMP ASSEMBLY 37
WATER PUMP ASSEMBLY 38
TRANSMISSION ASSEMBLY 39
SECONDARY TRANSMISSION ASSEMBLY 40
GEAR SHIFTING ASSEMBLY 41
SECONDARY DRIVE ASSEMBLY 42
MAGNETO ASSEMBLY 43

■ NOTE: The illustrations used in this Parts Manual are for reference to replacement part numbers only and are not to be used for assembly. For assembly procedures, use an Arctic Cat Service Manual. For a complete list of related items, refer to the current accessory catalog.

©2011 Arctic Cat Inc.

Effective August 2012

®™ Trademarks of Arctic Cat Inc., Thief River Falls, MN 56701

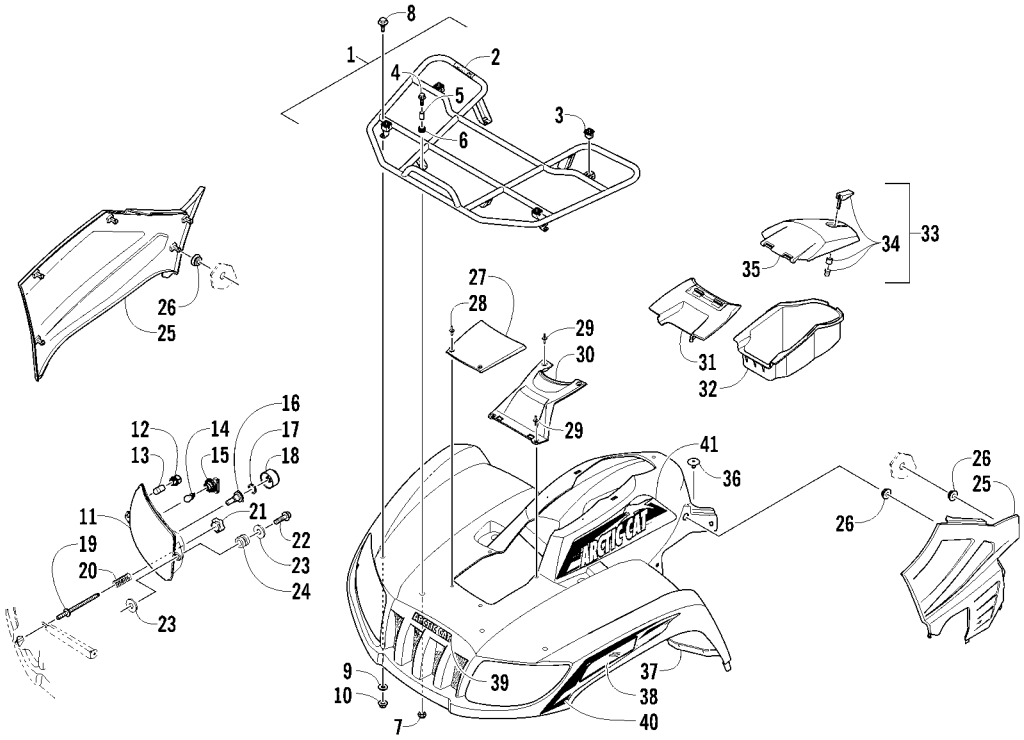

FRONT RACK, BODY PANEL, AND HEADLIGHT ASSEMBLIES

0746-019

Ref	Part No.	New	Qty	Description	Ref	Part No.	New	Qty	Description
1	2506-106		1	Rack, Front - Assembly (inc. 2-3)	23	8050-217		8	Washer
2	0411-576		1	● Decal, Warning - Load	24	0423-447		4	Grommet
3	0441-592		4	● Bushing	25	2406-324		1	Panel, Side - Lower - Right
4	8410-830		4	Screw, Cap		2406-421		1	Panel, Side - Lower - Left
5	0423-669		4	Spacer	26	0423-678		8	Grommet
6	0423-465		4	Grommet	27	1406-358		1	Cover, Access
7	8432-802		4	Nut, Lock	28	0423-535		2	Rivet, Reinstallable
8	0423-654		2	Screw, Shoulder	29	0623-362		4	Rivet, Reinstallable
9	8050-222		2	Washer	30	1406-484		1	Cover, Steering Post
10	0423-540		2	Nut, Lock	31	0470-513		1	Cover, Storage Box
11	0509-036		1	Headlight Assembly - Right (inc. 12-18)	32	1406-573		1	Box, Storage
	0509-037		1	Headlight Assembly - Left (inc. 12-18)	33	2506-234		1	Lid, Storage Box w/Latch (inc. 34-35)
12	0409-102		2	● Socket, Position Bulb	34	1406-599		1	● Latch, Storage Box
13	0409-101		2	● Bulb, Position	35	0470-514		1	● Lid, Storage Box
14	0409-099		2	● Bulb, Turn Signal	36	0423-101		2	Screw, Shoulder
15	0409-100		2	● Socket, Turn Signal Bulb	37	2506-254		1	Panel, Fender - Orange
16	0409-096		2	● Bulb, Headlight	38	0411-818		1	Decal, Reflector - Right - Amber
17	0409-097		2	● Retainer, Spring		0411-819		1	Decal, Reflector - Left - Amber
18	0409-098		2	● Boot, Rubber	39	1411-725		1	Decal, “Arctic Cat”
19	0423-514		2	Stud, Adjuster - Headlight	40	2411-722	X	1	Decal, Side - Front Right
20	0423-522		2	Spring, Adjuster		2411-723	X	1	Decal, Side - Front Left
21	0423-513		2	Knob, Adjuster	41	2411-724	X	1	Decal, Side - Upper Right
22	0623-785		4	Screw, Self-Tapping		2411-725	X	1	Decal, Side - Upper Left

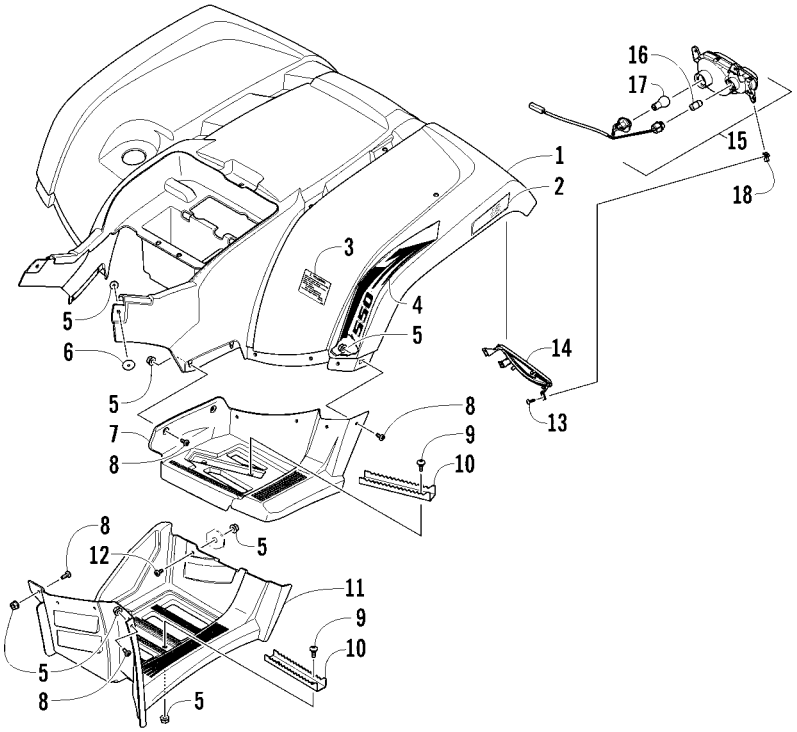

REAR BODY PANEL, FOOTWELL, AND TAILLIGHT ASSEMBLIES

0746-287

Ref	Part No.	New	Qty	Description	Ref	Part No.	New	Qty	Description
1	2516-784		1	Fender, Rear - Assembly - Orange	10	1506-125		4	Footpeg
2	1411-592		1	Decal, Reflector - Right - Red	11	1506-813		1	Footwell - Right
	1411-593		1	Decal, Reflector - Left - Red		2406-471		1	Footwell - Left
3	2411-609	X	1	Decal, Warning - Tire Pressure	12	8477-620		2	Screw, Machine
4	2411-730	X	1	Decal, Side - Lower Right	13	8476-516		6	Screw, Machine
	2411-731	X	1	Decal, Side - Lower Left	14	0409-112		1	Bezel, Taillight - Right
5	0423-540		34	Nut, Lock		0409-113		1	Bezel, Taillight - Left
6	0423-101		2	Screw, Shoulder	15	3313-392		1	Taillight Assembly - Right (inc. 16-17)
7	2406-042		1	Footwell, Rear - Right		3313-393		1	Taillight Assembly - Left (inc. 16-17)
	2406-043		1	Footwell, Rear - Left	16	3313-506		2	● Bulb, Turn Signal
8	0423-419		22	Screw, Machine	17	3303-849		2	● Bulb, Taillight
9	0423-355		8	Screw, Shoulder	18	3304-061		6	Clip, U-Nut

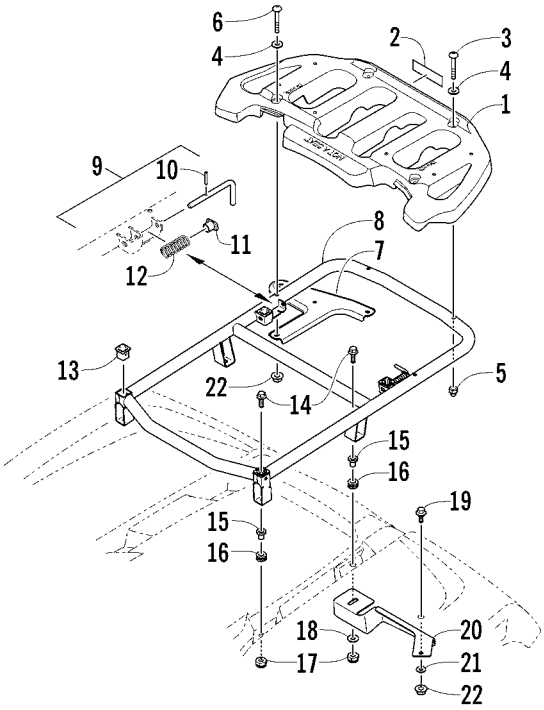

REAR RACK ASSEMBLY

0745-327

Ref	Part No.	New	Qty	Description	Ref	Part No.	New	Qty	Description
1	2516-339		1	Rack, Rear (inc. 2)	13	0441-592		4	● Bushing
2	1411-201		1	● Decal, Warning - Load	14	8410-835		4	Screw, Cap
3	8410-640		3	Screw, Cap	15	0423-669		4	Spacer
4	8050-223		4	Washer	16	0423-465		4	Grommet
5	0423-891		2	Nut, Cap	17	8432-802		4	Nut, Lock
6	8410-645		2	Screw, Cap	18	0423-087		2	Washer
7	2506-926		1	Bracket, Mounting - Safety Flag	19	0423-654		2	Screw, Shoulder
8	2516-169		1	Base, MRP - Assembly (inc. 9-13)	20	2506-092		1	Bracket, Rear Fender - Right
9	0541-504		2	● Pin - Assembly (inc. 10-12)		2506-093		1	Bracket, Rear Fender - Left
10	0423-635		2	●● Pin, Roll	21	8050-222		2	Washer
11	0423-677		2	●● Bushing, Flanged	22	0423-540		4	Nut, Lock
12	0423-636		2	●● Spring					

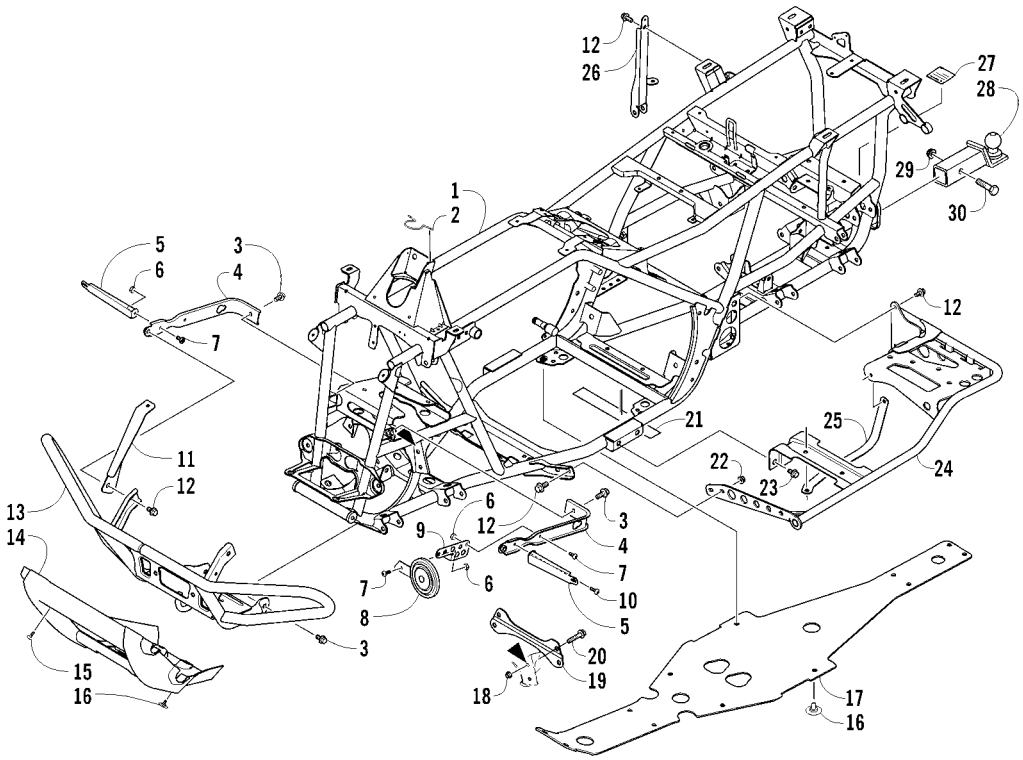

FRAME AND RELATED PARTS

0745-385

Ref	Part No.	New	Qty	Description	Ref	Part No.	New	Qty	Description
1	4506-553	X	1	Frame, Main	16	0423-101		12	Screw, Shoulder
2	2416-401		1	Clip, Routing	17	2406-091		1	Panel, Belly
3	8409-020		4	Screw, Cap	18	0423-744		2	Nut, Lock
4	1506-596		2	Channel, Bumper Mounting	19	2516-852		1	Brace, A-Arm
5	2416-162		1	Bracket, Support - Right	20	8409-025		2	Screw, Cap
	2416-163		1	Bracket, Support - Left	21	0406-289		2	Pad, Frame
6	0623-038		3	Nut w/Washer	22	8424-802		4	Nut
7	8477-616		3	Screw, Machine	23	8409-016		4	Screw, Cap
8	0430-053		1	Horn, Electric - 12V	24	1506-848		1	Footrest - Right
9	2406-321		1	Bracket, Mounting - Horn		1506-849		1	Footrest - Left
10	8477-620		1	Screw, Machine	25	2406-216		1	Strap, Footrest - Right
11	1506-562		1	Bracket, Mounting - Bumper - Right		2406-217		1	Strap, Footrest - Left
	1506-563		1	Bracket, Mounting - Bumper - Left	26	2506-447		1	Bracket, Support
12	8408-816		11	Screw, Cap	27	1411-077		1	Decal, Warning - Towing
13	1506-855		1	Bumper	28	0541-857		1	Mount, Ball Hitch (inc. 29-30)
14	1406-360		1	Fascia, Bumper - Front	29	0423-690		1	● Nut, Lock
15	0423-419		2	Screw, Machine	30	0423-693		1	● Screw, Cap

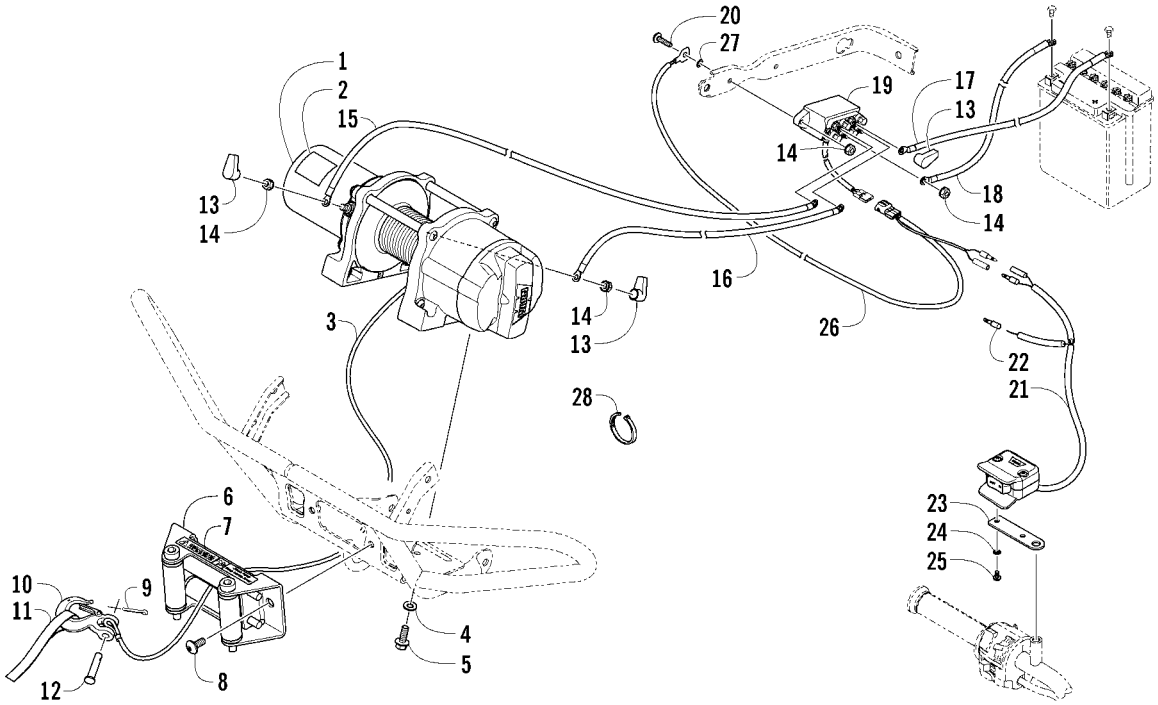

WINCH ASSEMBLY

0745-322

Ref	Part No.	New	Qty	Description	Ref	Part No.	New	Qty	Description
1	1441-657		1	Winch (inc. 2-3)	16	0445-069		1	Cable, Winch/Solenoid - Blue
2	1411-826		1	● Decal, Warning	17	0445-087		1	Cable, Solenoid/Battery - Red
3	0441-061		1	● Cable, Winch	18	1441-112		1	Cable, Solenoid/Battery - Black
4	8051-246		4	Washer, Lock	19	0409-066		1	Solenoid
5	8408-820		4	Screw, Cap	20	8476-625		2	Screw, Machine
6	0441-403		1	Roller, Winch (inc. 7)	21	0505-552		1	Switch, Winch - Assembly (inc. 22-27)
7	0411-474		1	● Decal, Warning - Pinch Point	22	1441-428		1	● Connector, Harness
8	8468-820		2	Screw, Machine	23	0505-551		1	● Bracket, Winch Switch
9	0623-175		1	Pin, Cotter	24	8052-093		2	● Washer, Internal Tooth Lock
10	1441-833		1	Hook, Winch	25	8009-243		2	● Screw, Machine
11	1441-781		1	Strap	26	0486-276		1	● Harness, Adapter - Solenoid
12	1441-834		1	Pin	27	8053-212		1	● Washer, External Tooth Lock
13	0645-019		3	Boot, Terminal	28	0123-788		AR	Tie, Cable - 8 in.
14	0623-038		8	Nut w/Washer		0123-903		AR	Tie, Cable - 11.5 in.
15	0445-068		1	Cable, Winch/Solenoid - Yellow					

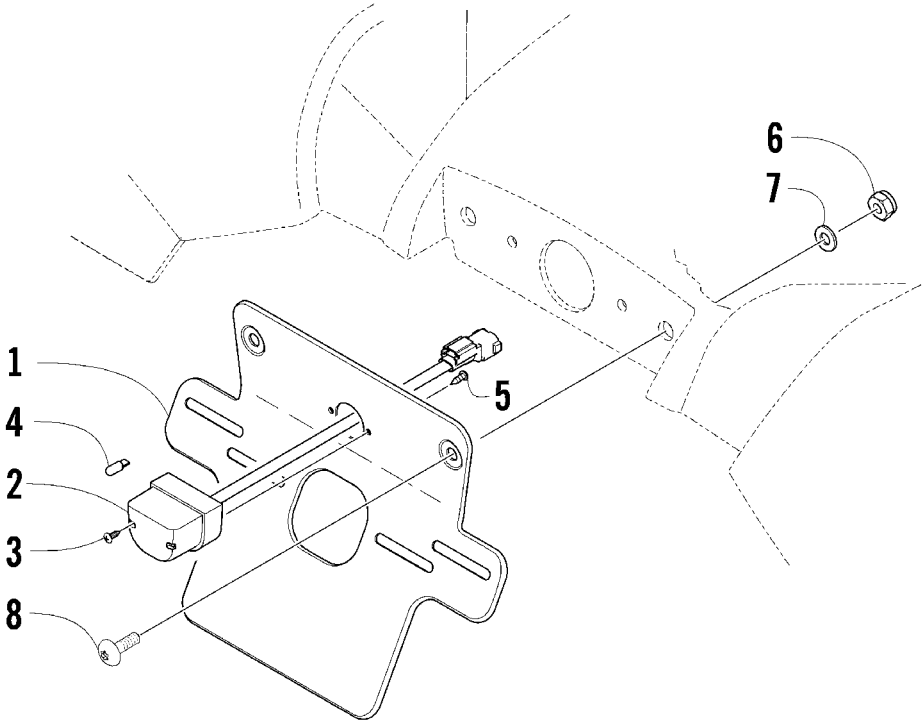

LICENSE PLATE HOLDER ASSEMBLY

0743-236

Ref	Part No.	New	Qty	Description	Ref	Part No.	New	Qty	Description
1	2506-914		1	Mount, License Plate	5	0123-950		2	Screw, Self-Tapping
2	3304-772		1	Light, License Plate Assembly (inc. 3-4)	6	8432-802		2	Nut, Lock
3	3305-399		2	● Screw, Self-Tapping	7	8050-247		2	Washer
4	3303-847		1	● Bulb	8	8468-820		2	Screw, Machine

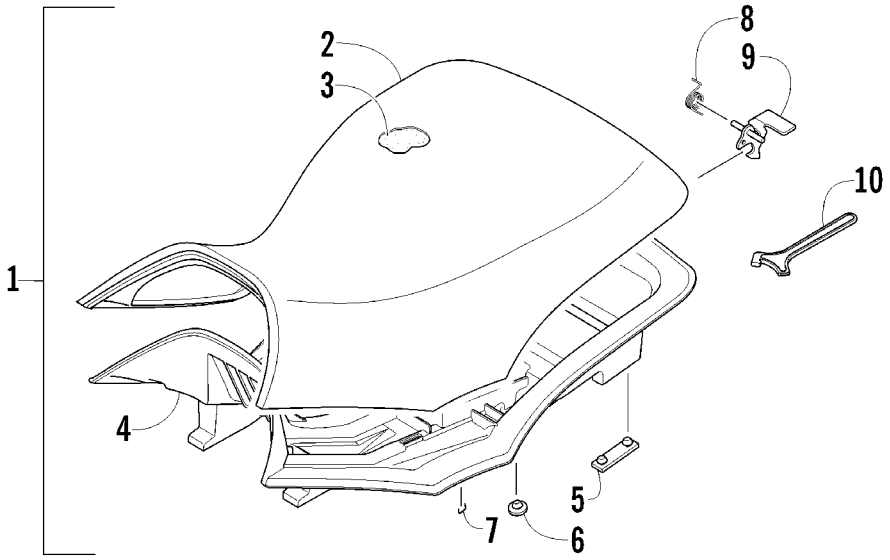

SEAT ASSEMBLY

0744-435

Ref	Part No.	New	Qty	Description	Ref	Part No.	New	Qty	Description
1	4506-557	X	1	Seat Assembly (inc. 2-9)	6	0406-877		4	●● Bumper, Seat - Front
2	1506-209		1	● Cover, Seat	7	0624-263		AR	● Staple
3	0517-119		1	● Foam, Seat	8	1406-592		1	● Spring, Seat Latch
4	2416-826	X	1	● Base, Seat - Assembly (inc. 5-6)	9	1506-156		1	● Latch, Seat
5	0406-879		2	●● Bumper, Seat - Rear	10	0441-587		1	Wrench, Spanner

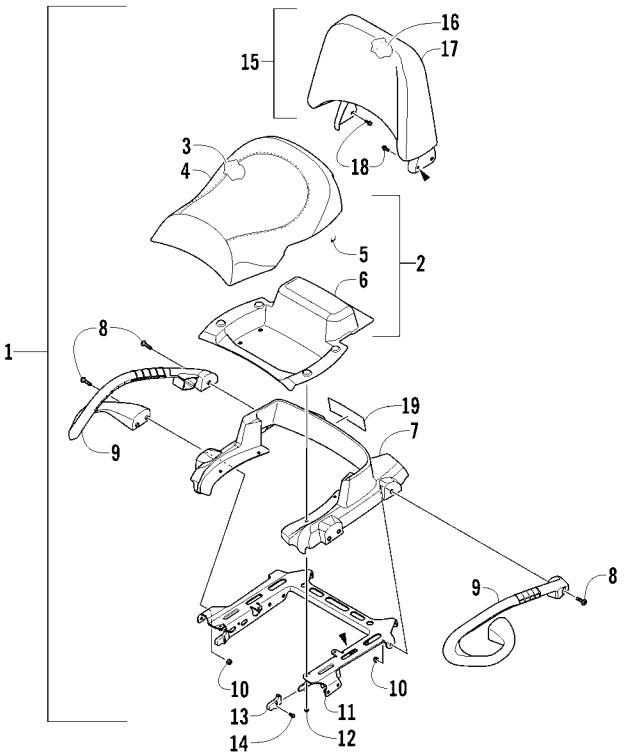

PASSENGER SEAT AND BACKREST ASSEMBLY

0745-710

Ref	Part No.	New	Qty	Description	Ref	Part No.	New	Qty	Description
1	2516-896		1	Seat, Passenger - Assembly (inc. 2-14)	10	8432-802		6	● Nut, Lock
2	2506-064		1	● Seat, Passenger - Sub-Assembly (inc. 3-6)	11	2516-040		1	● Bracket, Seat Support - Assembly
					12	8427-602		4	● Nut, Lock
3	1506-816		1	●● Foam, Seat - Passenger	13	2406-895		2	● End Cap, Seat Support
4	1506-815		1	●● Cover, Seat - Passenger	14	0423-538		2	● Screw, Self-Tapping
5	0624-263		AR	●● Staple	15	2516-020		1	Backrest Assembly (inc. 16-17)
6	2406-110		1	●● Base, Seat - Inner	16	2516-018		1	● Foam, Backrest
7	2406-044		1	● Base, Seat - Passenger	17	2516-141		1	● Cover, Backrest
8	8468-830		6	● Screw, Machine	18	8408-816		4	Screw, Cap
9	2406-834		1	● Handhold, Passenger - Right	19	0411-814		1	Decal, “Arctic Cat”
	2406-835		1	● Handhold, Passenger - Left					

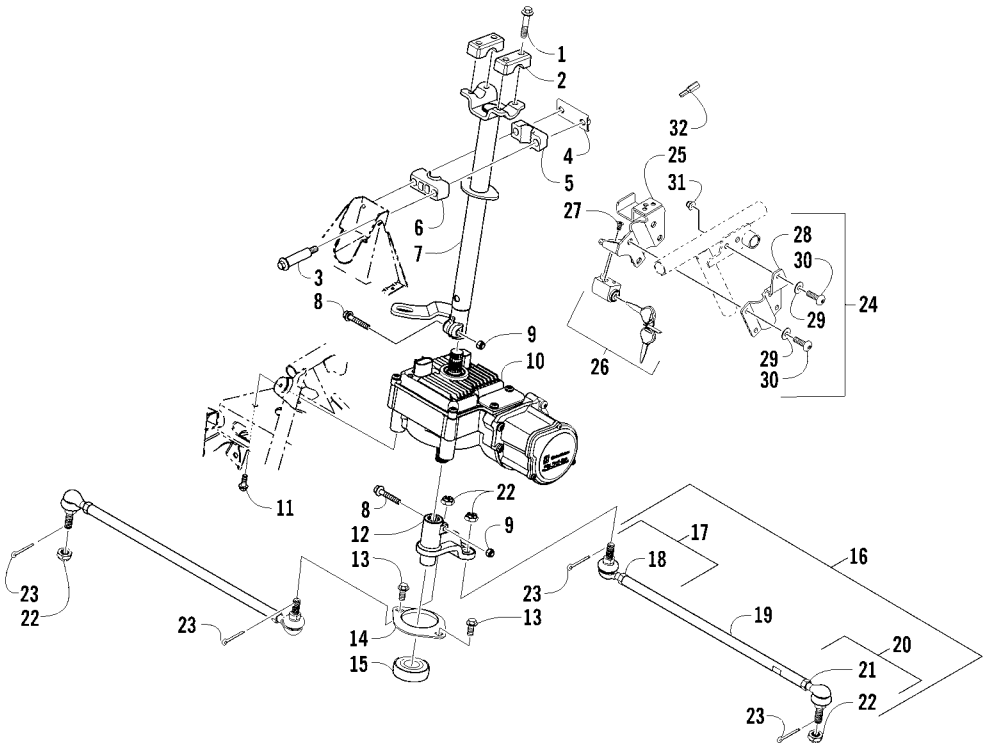

STEERING ASSEMBLY

0745-656

Ref	Part No.	New	Qty	Description	Ref	Part No.	New	Qty	Description
1	8408-835		4	Screw, Cap	18	0423-013		2	●● Nut - Left-Hand Thread
2	0405-035		2	Cap, Steering Adjuster	19	0405-281		2	● Tie Rod
3	0423-505		2	Screw, Shoulder	20	0505-510		2	● End, Tie Rod - Right-Hand Thread - Kit (inc. 21)
4	0505-484		1	Cap, Housing					
5	0405-260		1	Housing, Upper	21	8420-002		2	●● Nut - Right-Hand Thread
6	0405-259		1	Housing, Lower	22	0423-157		4	Nut, Lock
7	0505-712		1	Post, Steering	23	0623-175		4	Pin, Cotter
8	8020-045		2	Screw, Cap	24	0505-770	X	1	Lock, Steering - Assembly (inc. 25-31)
9	8040-366		2	Nut, Lock	25	0505-710		1	● Mount, Steering Lock
10	0505-766	X	1	Assembly, Electronic Power Steering	26	3306-182		1	● Lock, Steering
11	8409-020		4	Screw, Cap	27	1423-059		2	● Screw, Machine
12	0505-664		1	Arm, Steering	28	0405-409		1	● Mount, Steering Lock
13	8408-816		2	Screw, Cap	29	8050-247		5	● Washer
14	0602-233		1	Flange, Bearing	30	1423-112	X	5	● Screw, Cap
15	0405-052		1	Bearing w/Inverted Oil Seal	31	8424-802		1	● Nut
16	0505-499		2	Tie Rod - Assembly (inc. 17-21)	32	2441-251	X	1	Tool, Anti-Tamper - Optional
17	0505-511		2	● End, Tie Rod - Left-Hand Thread - Kit (inc. 18)					

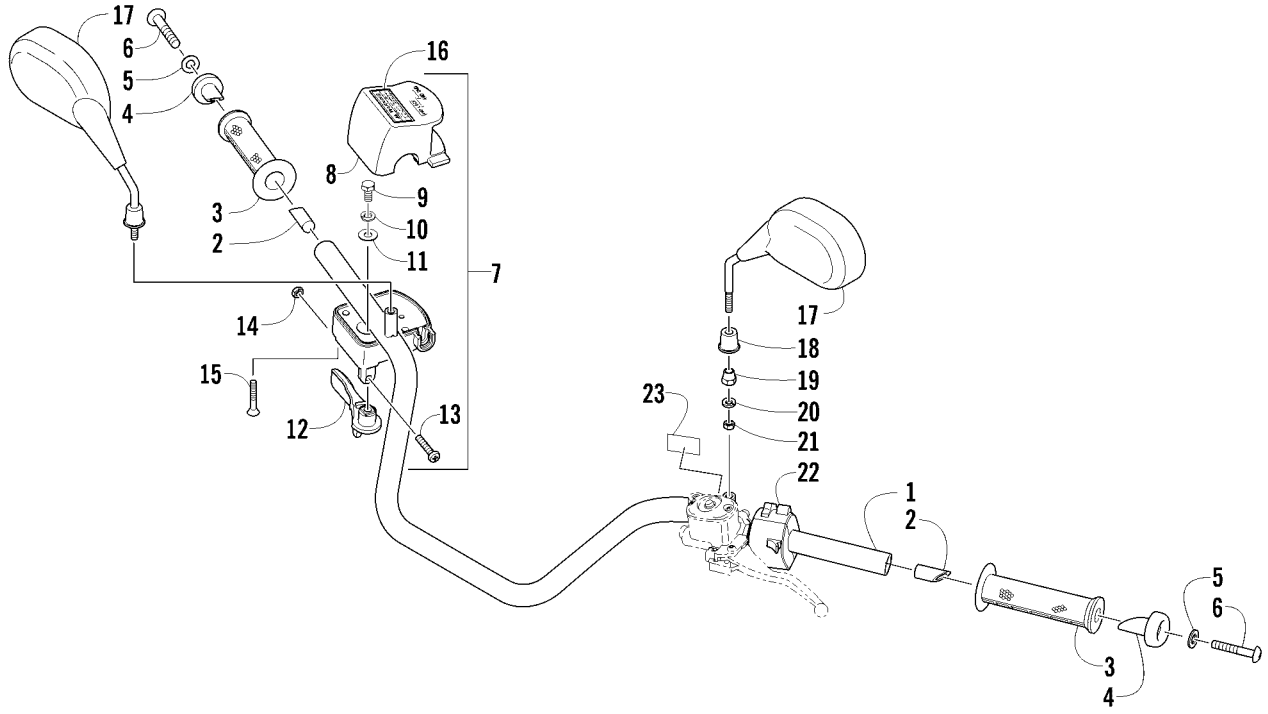

HANDLEBAR ASSEMBLY

0745-005

Ref	Part No.	New	Qty	Description	Ref	Part No.	New	Qty	Description
1	0505-522		1	Handlebar	13	3423-014		1	● Screw, Machine
2	0405-218		2	Plug, Handlebar	14	3423-327		1	● Nut
3	0405-147		2	Grip, Handlebar	15	3423-199		2	● Screw, Machine
4	0405-149		2	End Cap, Handlebar	16	0411-966		1	Decal, Warning - Differential Lock
5	8050-247		2	Washer	17	2406-630		1	Mirror - Right (inc. 18-21)
6	8477-845		2	Screw, Machine		2406-631		1	Mirror - Left (inc. 18-21)
7	0509-054		1	Case, Throttle - Assembly (inc. 8-15)	18	0423-985		2	● Cover
8	0409-141		1	● Cover, Throttle Case w/Switch	19	0423-986		2	● Nut, Adjuster
9	3007-392		1	● Screw, Cap	20	0423-987		2	● Washer, Lock
10	3004-447		1	● Washer, Lock	21	0423-988		2	● Nut
11	3003-030		1	● Washer	22	0409-081		1	Switch, Control - Assembly
12	0409-133		1	● Lever, Throttle	23	1411-865		1	Decal, Warning - Brake Lever Lock

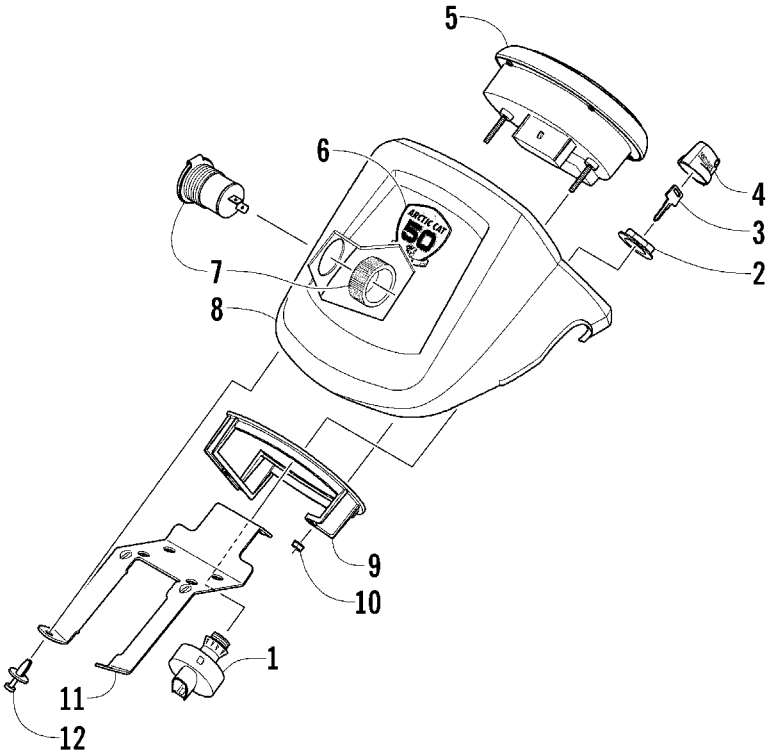

INSTRUMENT POD ASSEMBLY

0745-865

Ref	Part No.	New	Qty	Description	Ref	Part No.	New	Qty	Description
1	0430-090		1	Switch, Ignition - Assembly (inc. 2-4)	6	9611-399	X	1	Decal, 50th Anniversary
2	0430-050		1	● Nut, Retaining	7	0641-897		1	Outlet, Accessory - 12V
3	0430-042		1	● Key, Ignition - (Y Series - Left-Side Cut)	8	0505-498		1	Instrument Pod - Orange
					9	0420-065		1	Bracket, Retaining
	0430-043		1	● Key, Ignition - (Z Series - Right-Side Cut)	10	0423-493		2	Nut w/Washer
					11	2506-470		1	Bracket, Mounting - Instrument Pod
4	0430-054		1	● Cover, Key	12	0423-535		2	Rivet, Reinstallable
5	0520-164	X	1	Gauge, LCD					

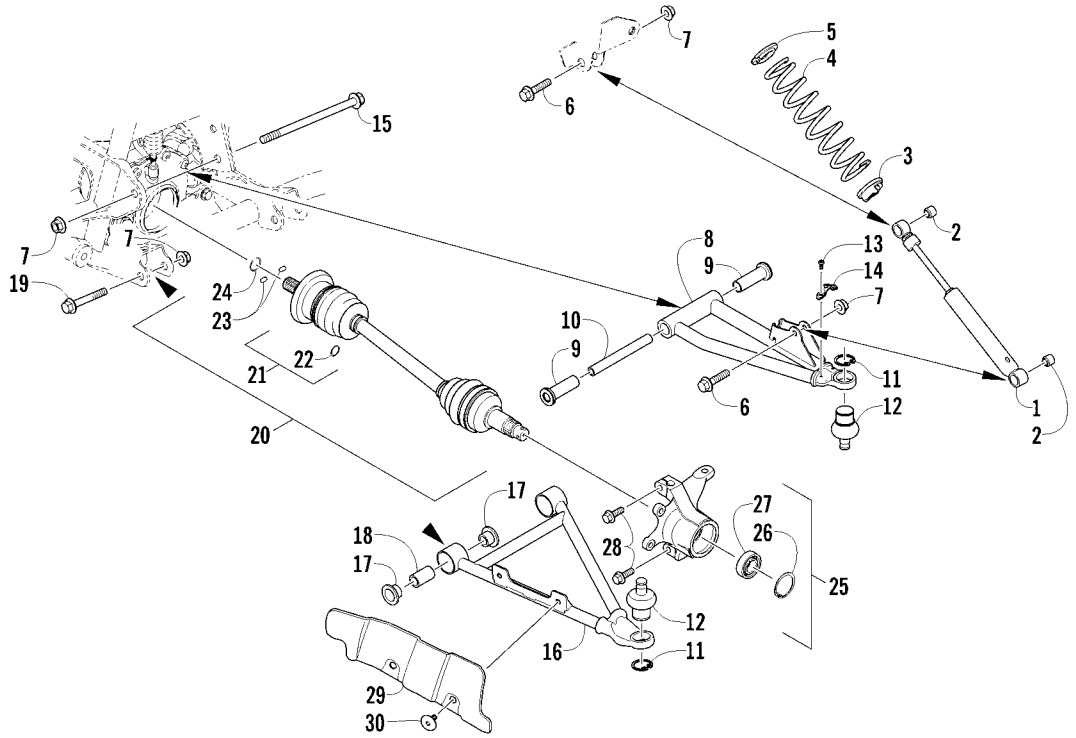

FRONT SUSPENSION ASSEMBLY

0745-247

Ref	Part No.	New	Qty	Description	Ref	Part No.	New	Qty	Description
1	0403-209		2	Shock Absorber (inc. 2)	17	0403-208		8	● Bushing
2	0403-182		4	● Bushing	18	0403-214		4	● Axle
3	0403-102		2	Cam, Spring Adjuster	19	8409-075		4	Screw, Cap
4	0503-468		2	Spring, Suspension - White	20	1502-800		1	Axle, Drive - Right (inc. 21-24)
5	1603-889		2	Retainer, Spring		1502-799		1	Axle, Drive - Locking - Left (inc. 21-24)
6	8409-040		4	Screw, Cap	21	1436-419		2	● Repair Kit, Boot (inc. 22)
7	0423-744		10	Nut, Lock	22	1441-988		2	●● Clip, Retaining
8	0503-416		1	A-Arm, Upper Right - Black (inc. 9-12)	23	1402-885		4	● Pin, Detent
	0503-417		1	A-Arm, Upper Left - Black (inc. 9-12)	24	1402-889		2	● Clip, Retaining
9	0403-207		4	● Bushing	25	0505-576		1	Knuckle - Assembly - Right (inc. 26-27)
10	0403-080		2	● Axle		0505-577		1	Knuckle - Assembly - Left (inc. 26-27)
11	0423-009		4	● Ring, Retaining	26	0423-423		2	● Ring, Retaining
12	0405-115		4	● Ball Joint	27	1402-809		2	● Bearing
13	0423-946		4	Screw, Self-Tapping	28	0423-998		4	Screw, Shoulder
14	1502-594		2	Clamp, Routing	29	1406-034		1	Guard, Boot - Right - Black
15	0423-334		2	Screw, Cap		1406-035		1	Guard, Boot - Left - Black
16	0503-376		1	A-Arm, Lower Right - Black (inc. 17-18 and two No. 11-12)	30	0423-545		4	Screw, Shoulder
	0503-377		1	A-Arm, Lower Left - Black (inc. 17-18 and two No. 11-12)					

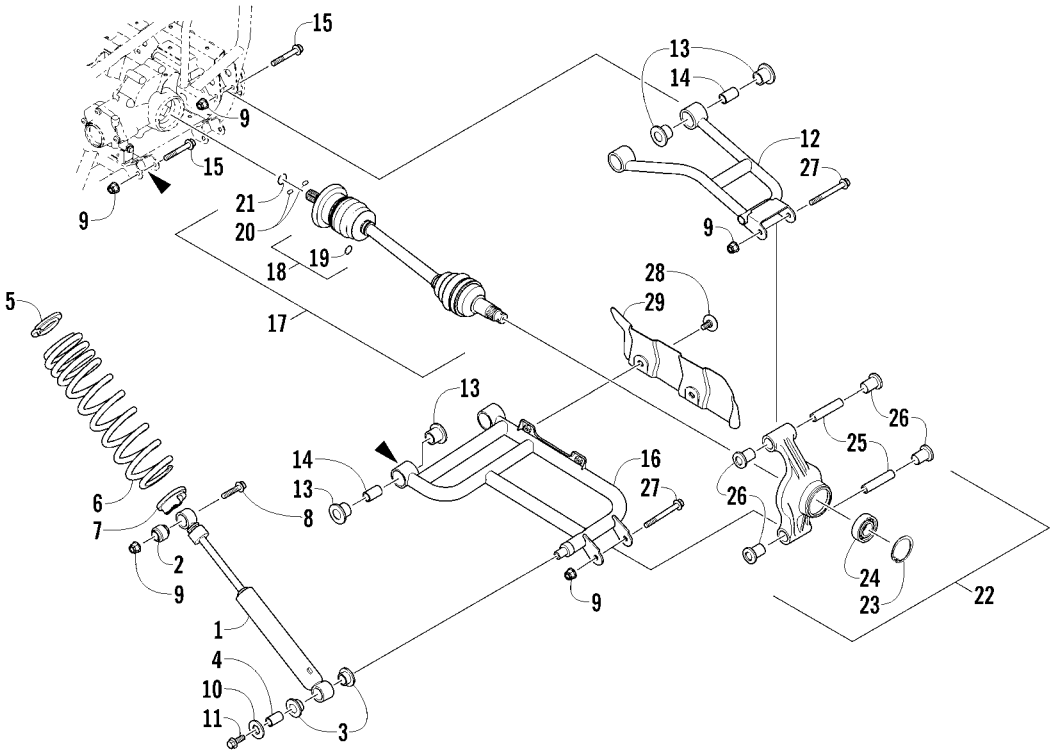

REAR SUSPENSION ASSEMBLY

0745-252

Ref	Part No.	New	Qty	Description	Ref	Part No.	New	Qty	Description
1	0404-158		2	Shock Absorber (inc. 2-4)	17	1502-798		2	Axle, Drive (inc. 18-21)
2	0403-182		2	● Bushing	18	1436-419		2	● Repair Kit, Boot (inc. 19)
3	0603-955		4	● Bushing	19	1441-988		2	●● Clip, Retaining
4	1603-219		2	● Sleeve	20	1402-884		4	● Pin, Detent
5	1603-889		2	Retainer, Spring	21	1402-890		2	● Clip, Retaining
6	0504-638		2	Spring, Suspension - White	22	0504-616		1	Knuckle, Right - Assembly (inc. 23-26)
7	0404-057		2	Cam, Spring Adjuster		0504-549		1	Knuckle, Left - Assembly (inc. 23-26)
8	8409-050		2	Screw, Cap	23	0423-423		2	● Ring, Retaining
9	0423-744		14	Nut, Lock	24	1402-809		2	● Bearing
10	0423-087		2	Washer	25	0403-213		4	● Axle
11	8408-820		2	Screw, Cap	26	0403-206		8	● Bushing
12	0504-582		1	A-Arm, Rear - Upper Right - Black (inc. 13-14)	27	8409-000		4	Screw, Cap
	0504-583		1	A-Arm, Rear - Upper Left - Black (inc. 13-14)	28	0423-545		4	Screw, Shoulder
13	0403-208		16	● Bushing	29	1406-068		1	Guard, Boot - Rear - Right - Black
14	0403-214		8	● Axle		1406-069		1	Guard, Boot - Rear - Left - Black
15	8409-075		8	Screw, Cap					
16	0504-572		1	A-Arm, Rear - Lower Right - Black (inc. 13-14)					
	0504-573		1	A-Arm, Rear - Lower Left - Black (inc. 13-14)					

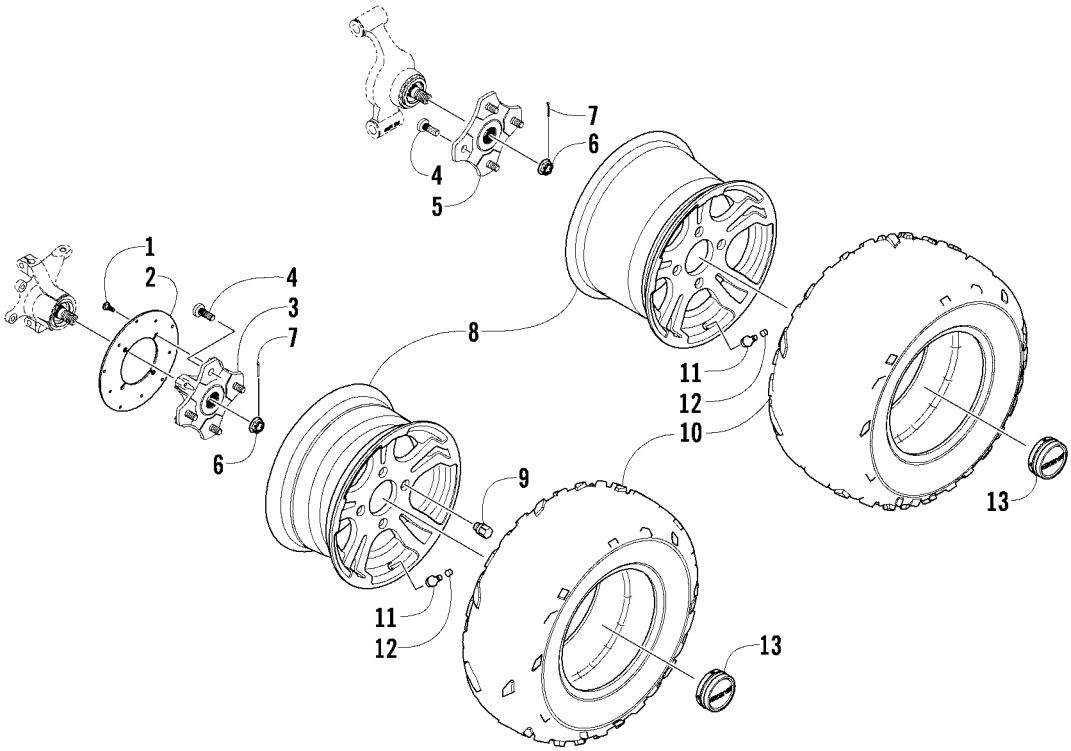

WHEEL AND TIRE ASSEMBLY

0743-965

Ref	Part No.	New	Qty	Description	Ref	Part No.	New	Qty	Description
1	0423-557		12	Screw, Shoulder	8	1402-730		2	Wheel - Front - Aluminum
2	1436-164		3	Disc, Brake		1402-731		2	Wheel - Rear - Aluminum
3	1502-462		2	Hub, Wheel - Front (inc. 4)	9	0423-618		16	Nut, Lug - Chrome
4	0402-974		16	● Stud	1	1402-858		2	Tire - Front
5	1502-462		1	Hub, Wheel - Rear - Right (inc. 4)	10	1402-859		2	Tire - Rear
	1502-464		1	Hub, Wheel - Rear - Left (inc. 4)	11	0402-064		4	Stem, Valve (inc. 12)
6	0423-607		4	Nut, Castle	12	0402-140		4	● Cap, Valve Stem
7	0423-407		4	Pin, Cotter	13	1402-736		4	Cap, Wheel

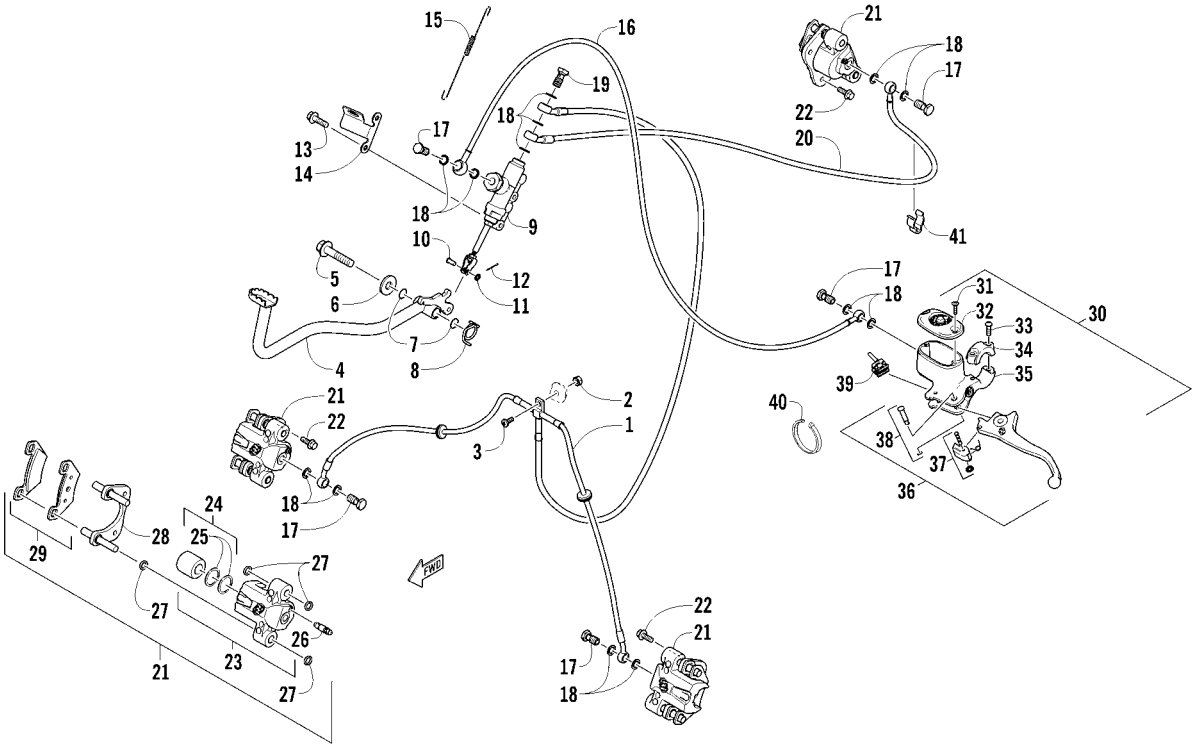

HYDRAULIC BRAKE ASSEMBLY

0745-906

Ref	Part No.	New	Qty	Description	Ref	Part No.	New	Qty	Description
1	1502-148		1	Hose, Brakeline - Assembly	22	8408-821		6	● Screw, Cap
2	0623-038		1	Nut w/Washer	23	1436-160		1	● Housing, Caliper - Assembly - Right Front (inc. two No. 22 and 24-26)
3	8476-625		1	Screw, Machine					
4	1502-063		1	Lever, Brake		1436-161		1	● Housing, Caliper - Assembly - Left Front (inc. two No. 22 and 24-26)
5	8408-816		1	Screw, Cap					
6	8050-252		1	Washer		1436-161		1	● Housing, Caliper - Assembly - Rear (inc. two No. 22 and 24-26)
7	1602-213		2	O-Ring					
8	0502-807		1	Spring, Brake Lever	24	0502-606		3	●● Piston/Seal Set (inc. 25)
9	1502-147		1	Brake Assembly	25	0502-607		3	●●● Seal Set
10	1402-377		1	Pin, Clevis	26	0502-609		3	●● Valve, Bleed
11	8050-217		1	Washer	27	0502-608		3	● O-Ring, Guide - Set
12	0117-868		1	Pin, Cotter	28	0502-605		3	● Bracket Assembly
13	8408-625		2	Screw, Cap	29	1502-694		3	● Pad, Brake - Set
14	0502-840		1	Bracket, Switch	30	0502-914		1	Brake Assembly (inc. 31-39)
15	0502-785		1	Spring, Brake Switch	31	0502-566		1	● Screw, Machine - Kit
16	1402-592		1	Hose, Brakeline	32	0502-868		1	● Cover, Reservoir
17	0423-413		5	Bolt, Banjo-Fitting	33	0502-568		1	● Screw, Machine - Kit
18	0423-178		13	Washer, Crush	34	0502-869		1	● Clamp, Master Cylinder
19	0423-610		1	Bolt, Banjo-Fitting - Double	35	0502-704		1	● Master Cylinder Assembly
20	1402-594		1	Hose, Brakeline	36	0502-866		1	● Lever Assembly - Kit (inc. 37-38)
21	1436-422		1	Caliper, Brake - Right Front (inc. two No. 22 and 23-29)	37	0502-867		1	●● Lock, Brake Lever - Kit
					38	0502-580		1	●● Lever Pin - Kit
	1436-423		1	Caliper, Brake - Left Front (inc. two No. 22 and 23-29)	39	0502-564		1	● Switch, Brake
					40	0123-788		AR	Tie, Cable - 8 in.
	1436-423		1	Caliper, Brake - Rear (inc. two No. 22 and 23-29)	41	1502-115		2	Clip, Brakeline Hose

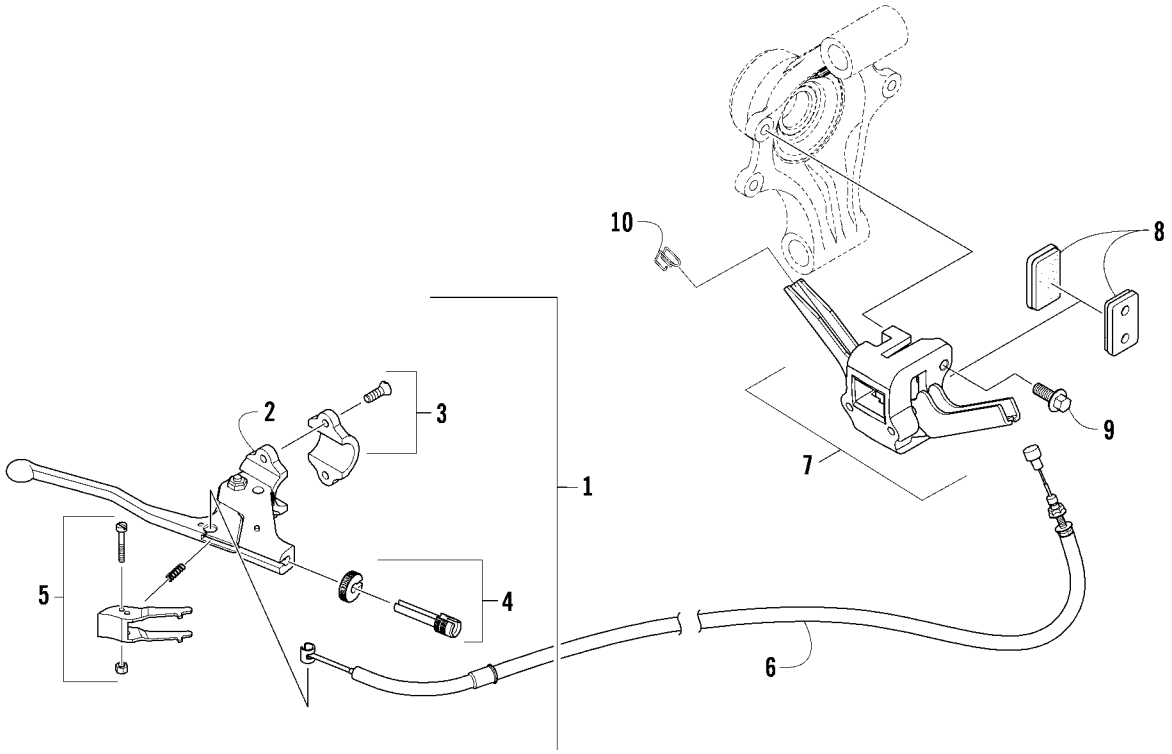

PARKING BRAKE ASSEMBLY

0743-214

Ref	Part No.	New	Qty	Description	Ref	Part No.	New	Qty	Description
1	1502-278		1	Lever, Parking Brake - Assembly (inc. 2-6)	6	0487-055		1	● Cable, Brake - Rear
					7	1502-865		1	Mechanical Brake Assembly (inc. 8)
2	1502-429		1	● Lever, Parking Brake - Kit	8	1402-602		2	● Pad, Brake
3	1502-432		1	● Clamp, Handlebar - Kit	9	8408-826		2	Screw, Cap
4	1502-430		1	● Adjuster, Thumb Nut - Kit	10	0402-379		1	Wire Form, Cable
5	1502-431		1	● Lock, Parking Brake Lever - Kit					

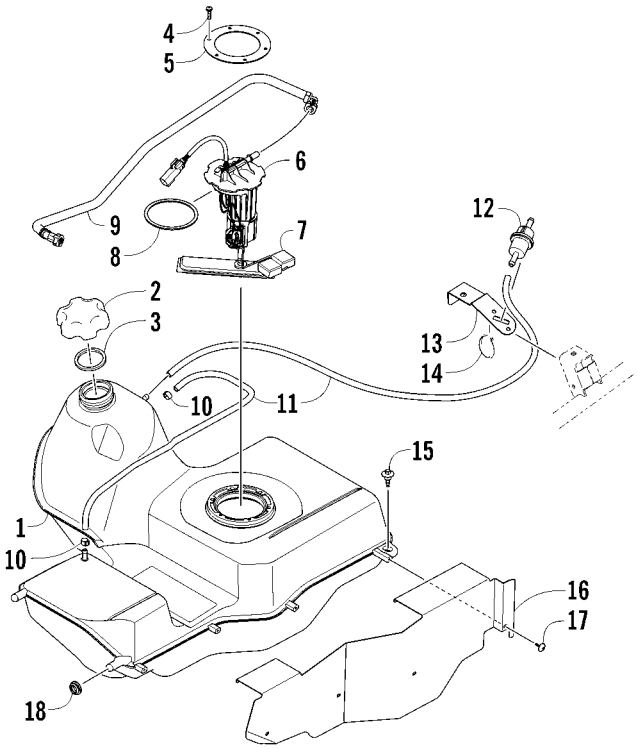

GAS TANK ASSEMBLY

0745-565

Ref	Part No.	New	Qty	Description	Ref	Part No.	New	Qty	Description
1	0570-308		1	Tank, Gas - Assembly (inc. 2-5)	10	0423-688		2	Clamp, Hose
2	0470-438		1	● Cap, Gas Tank (inc. 3)	11	0410-070		AR	Hose, Gasline - 25 ft
3	0109-733		1	●● Gasket, Gas Tank Cap	12	0510-335		1	Filter, In-Line
4	0423-898		6	● Screw, Self-Tapping	13	0470-794		1	Bracket, Mounting - Filter
5	2670-042		1	● Plate, Retaining	14	0123-788		AR	Tie, Cable - 8 in.
6	0570-323		1	Pump, Fuel - Assembly (inc. 7-8)	15	0423-732		2	Screw, Shoulder
7	2670-235		1	● Float	16	0470-822		1	Shield, Heat
8	0470-838		1	● Seal	17	0623-797		4	Screw, Self-Tapping
9	0570-305		1	Hose, Fuel - Assembly	18	0423-460		2	Grommet

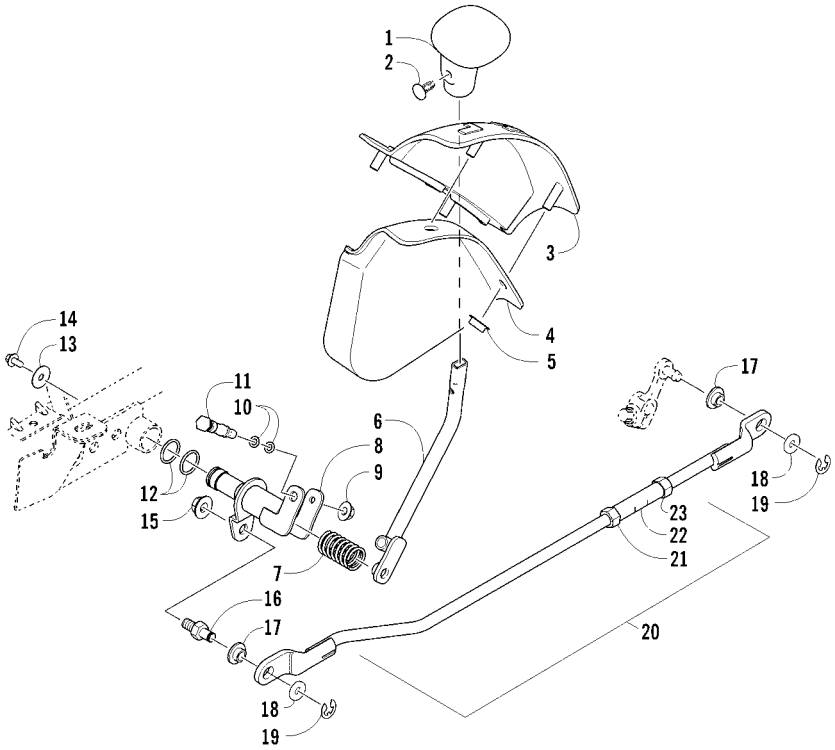

SHIFT LEVER ASSEMBLY

0745-123

Ref	Part No.	New	Qty	Description	Ref	Part No.	New	Qty	Description
1	0402-843		1	Knob, Shift	13	0423-087		1	Washer
2	0423-345		1	Clip, Retaining	14	8408-812		1	Screw, Cap
3	1402-576		1	Plate, Shift	15	8424-802		1	Nut
4	2406-345		1	Shield, Shift Plate	16	1402-621		1	Pin, Mounting
5	0423-357		4	Nut, Stamped	17	0423-091		2	Bushing
6	0502-659		1	Lever, Shift	18	0623-094		2	Washer
7	0402-678		1	Spring, Shift Lever	19	0423-169		2	E-Ring
8	1502-332		1	Actuator, Shift	20	1502-200		1	Linkage, Shift - Assembly (inc. 21-23)
9	8424-602		1	Nut	21	0123-917		1	● Nut, Hex - Left-Hand Thread
10	0423-182		2	O-Ring	22	1402-619		1	● Coupler
11	0402-675		1	Axle, Pivot	23	0623-294		1	● Nut, Hex - Right-Hand Thread
12	0423-299		2	O-Ring					

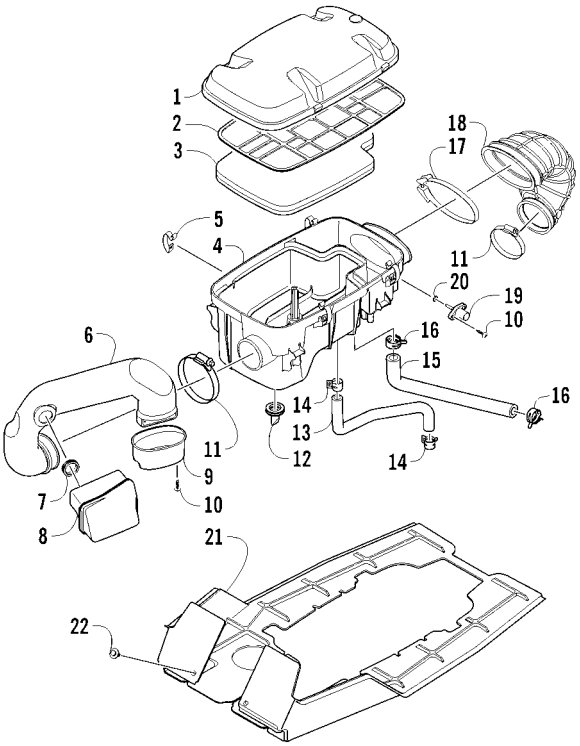

AIR INTAKE ASSEMBLY

0745-077

Ref	Part No.	New	Qty	Description	Ref	Part No.	New	Qty	Description
1	0470-877		1	Cover, Intake	12	0470-442		1	Valve, Drain
2	0470-560		1	Screen, Air Filter	13	0410-172		1	Hose, Vent
3	0470-558		1	Filter, Air	14	1623-281		2	Clamp, Hose
4	0470-728		1	Housing, Intake	15	0470-896		1	Hose
5	0423-455		4	Clip, Spring	16	1623-289		2	Clamp
6	0470-749		1	Duct, Engine Intake	17	0423-554		1	Clamp, Boot
7	0423-763		1	Grommet	18	0470-511		1	Boot
8	0570-215		1	Resonator	19	0430-055		1	Sensor, Air Temperature (inc. 20)
9	0470-729		1	Boot	20	5507-224		1	● O-Ring
10	0423-342		4	Screw, Self-Tapping	21	2406-604		1	Panel, Shield
11	0423-019		2	Clamp, Boot	22	0623-362		2	Rivet, Reinstallable

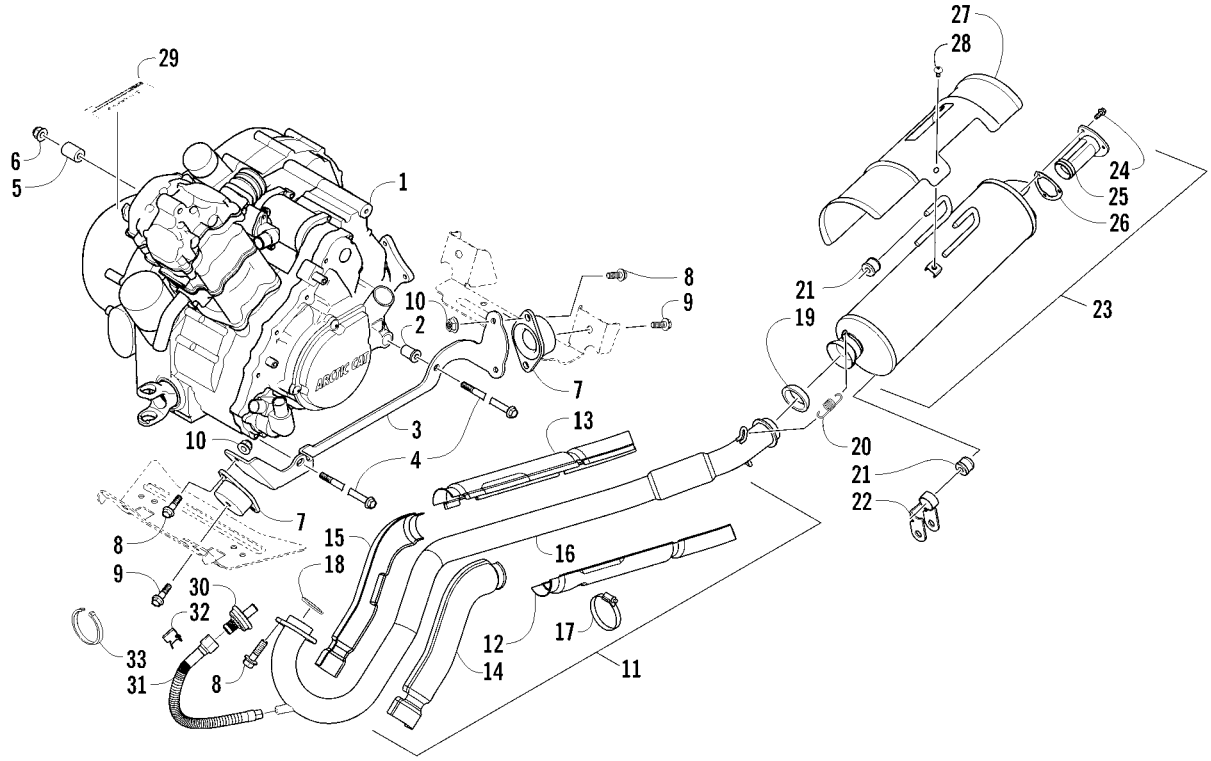

ENGINE AND EXHAUST

0745-098

Ref	Part No.	New	Qty	Description	Ref	Part No.	New	Qty	Description
1	0800-073		1	Engine, A550F	17	0423-317		3	● Clamp
2	0801-180		4	Mount, Rubber - Engine	18	0412-338		1	Gasket, Exhaust Pipe
3	1506-740		1	Bracket, Engine - Right	19	0412-375		1	Seal, Exhaust
	1506-741		1	Bracket, Engine - Left	20	0612-668		2	Spring, Extension
4	0423-405		2	Screw, Cap	21	0412-577		3	Bushing
5	1623-025		1	Spacer, Engine	22	1506-732		1	Channel, Muffler Support
6	8428-002		2	Nut, Lock	23	0512-592	X	1	Muffler - Assembly (inc. 24-26)
7	2406-065		4	Mount, Engine	24	8408-616		3	● Screw, Cap
8	8408-820		10	Screw, Cap	25	0512-219		1	● Arrester, Spark - Assembly
9	8408-012		4	Screw, Cap	26	0412-313		1	● Gasket, Spark Arrester
10	8432-802		8	Nut, Lock	27	0412-373		1	Cover, Muffler
11	0512-536		1	Pipe, Exhaust - Assembly (inc. 12-17)	28	8477-610		3	Screw, Machine
12	0512-568		1	● Shield, Exhaust Pipe - Lower - Rear	29	0411-426		1	Decal, Warning - Clutch Cover
13	0512-567		1	● Shield, Exhaust Pipe - Upper - Rear	30	0512-577		1	Valve, Air
14	0412-349		1	● Shield, Exhaust Pipe - Inner - Front	31	0412-574		1	Hose
15	0412-348		1	● Shield, Exhaust Pipe - Outer - Front	32	0412-573		1	Bracket, Retaining
16	0512-537		1	● Pipe, Exhaust	33	0123-903		AR	Tie, Cable - 11.5 in.

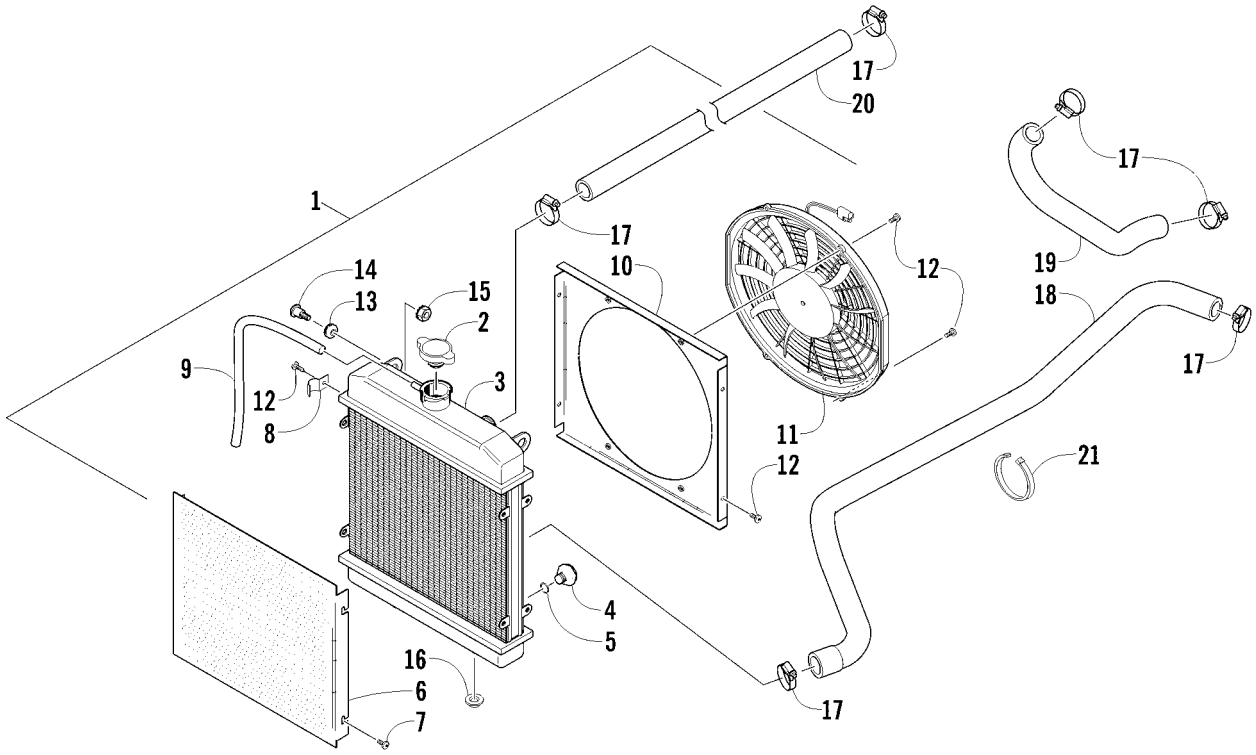

COOLING ASSEMBLY

0745-858

Ref	Part No.	New	Qty	Description	Ref	Part No.	New	Qty	Description
1	0413-256		1	Radiator Assembly (inc. 2-13)	11	0413-123		1	● Fan, Cooling
2	0413-255		1	● Cap	12	0623-378		8	● Screw, Self-Tapping
3	0413-205		1	● Radiator	13	0423-030		2	● Grommet
4	0413-195		1	● Plug, Drain	14	0423-484		2	Screw, Shoulder
5	1602-213		1	● O-Ring	15	0623-038		2	Nut w/Washer
6	0413-007		1	● Screen	16	0423-028		2	Bushing, Stem
7	8475-512		4	● Screw, Machine	17	0423-496		6	Clamp, Hose
8	0423-351		1	● Clamp, Wire	18	0410-229		1	Hose, Coolant - Lower
9	0610-016		AR	● Hose - 25 ft	19	0410-022		1	Hose, Coolant - Crossover
	0610-015		AR	● Hose - 100 ft	20	0410-002		1	Hose, Coolant - Upper
10	0413-203		1	● Shroud, Fan	21	0123-903		AR	Tie, Cable - 11.5 in.

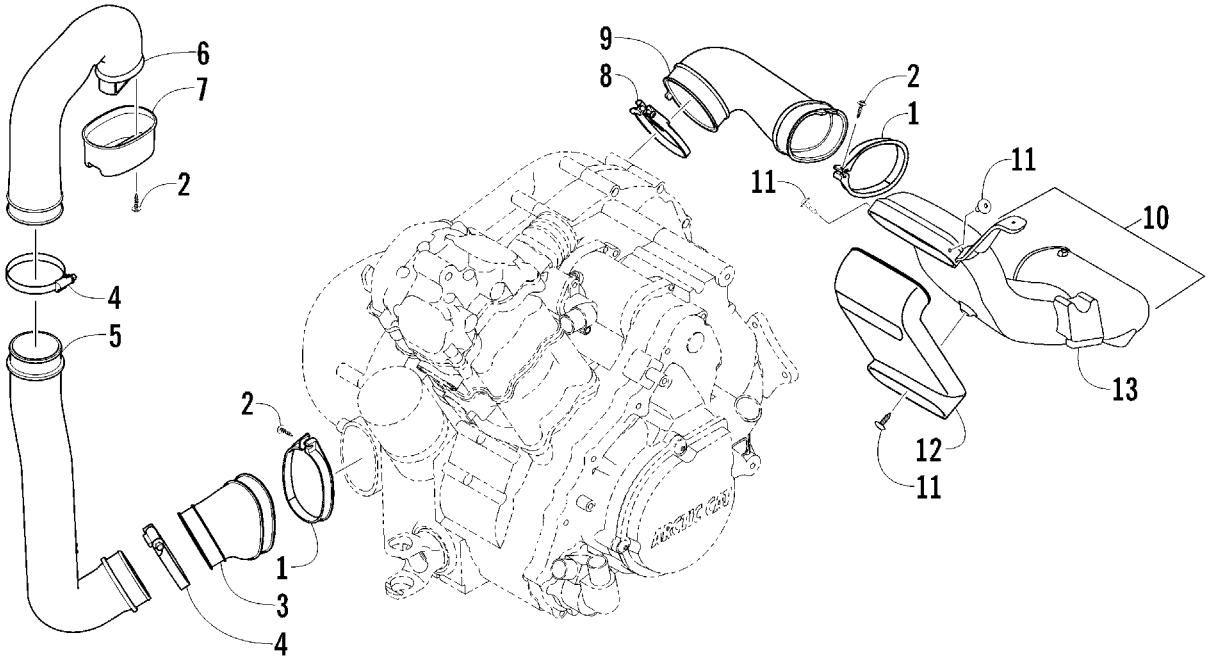

CASE/BELT COOLING ASSEMBLY

0744-433

Ref	Part No.	New	Qty	Description	Ref	Part No.	New	Qty	Description
1	0423-550		2	Clamp	8	0423-730		1	Clamp
2	0423-342		4	Screw, Self-Tapping	9	0413-206		1	Boot, Duct - Air Out - Rear
3	0413-252		1	Boot, Duct - Air Intake - Front	10	0470-824		1	Duct, Air Out - Rear (inc. three No. 11 and 12-13)
4	0423-019		2	Clamp					
5	0413-250		1	Duct, Air Intake - Front - Lower	11	0623-784		4	● Screw, Self-Tapping
6	0470-750		1	Duct, Air Intake - Front - Upper	12	0470-778		1	● Duct
7	0470-729		1	Cup, Air Intake	13	0470-825		1	● Duct

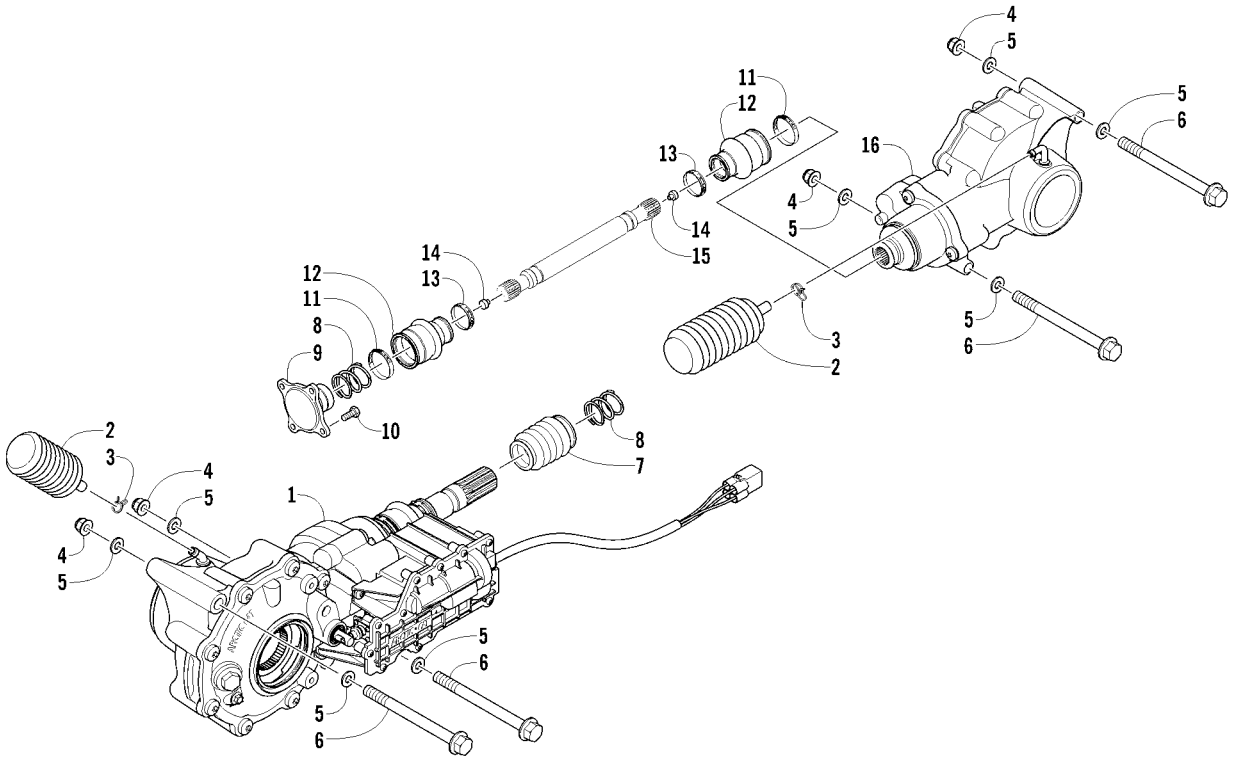

DRIVE TRAIN ASSEMBLY

0745-861

Ref	Part No.	New	Qty	Description	Ref	Part No.	New	Qty	Description
1	1502-878	X	1	Gearcase, Front	9	0402-950		1	Flange, Output
2	1402-620		2	Bladder, Gearcase	10	8408-820		4	Screw, Cap
3	0423-315		2	Clamp, Hose	11	0423-393		2	Clamp
4	8428-002		4	Nut, Lock	12	0402-985		2	Boot
5	0423-426		8	Washer	13	0423-411		2	Clamp
6	0423-404		4	Screw, Cap	14	0673-618		2	Bumper, Propeller Shaft
7	0402-966		1	Boot, Shaft	15	1402-092		1	Shaft, Propeller
8	1402-026		2	Spring	16	1502-879	X	1	Gearcase, Rear

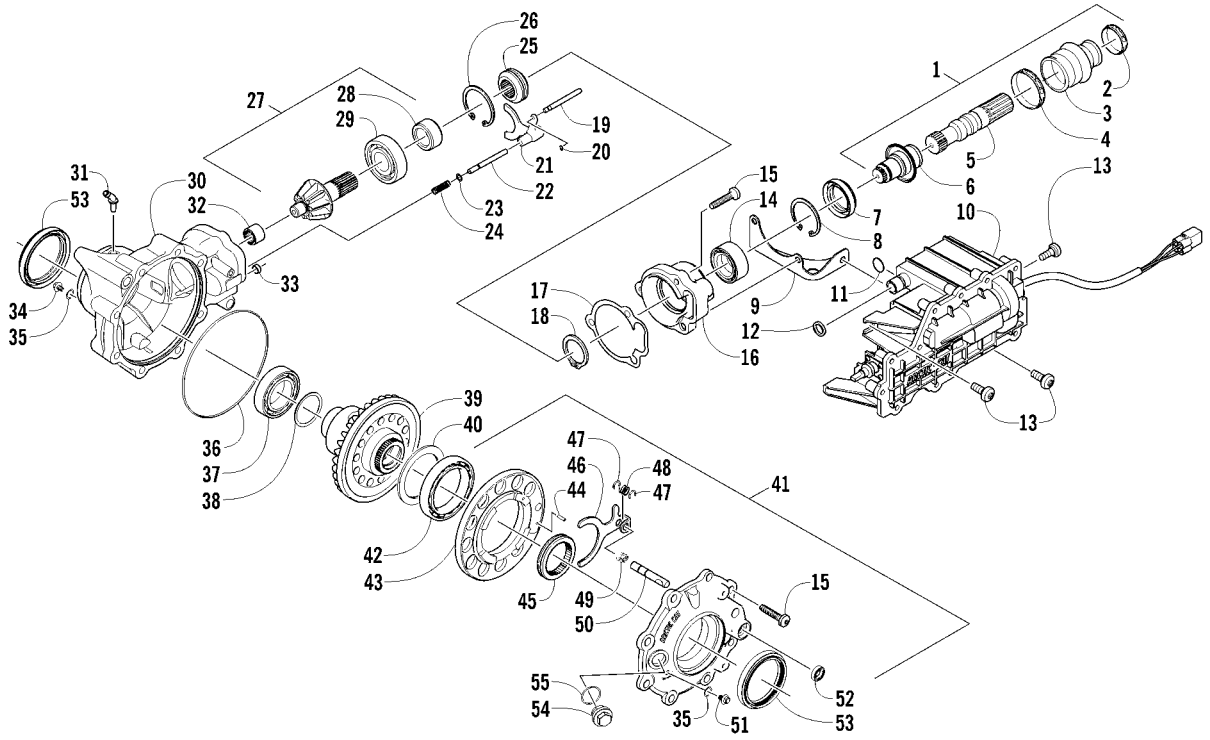

FRONT DRIVE GEARCASE ASSEMBLY

0745-863

Ref	Part No.	New	Qty	Description	Ref	Part No.	New	Qty	Description
-	1502-878	X	1	Complete Front Drive Gearcase Assembly	32	0402-328		1	Bearing
					33	0402-411		1	Pin, Dowel
1	1502-083		1	Shaft, Propeller - Assembly (inc. 2-6)	34	1402-210		1	Plug, Magnetic (inc. one No. 35)
2	0423-411		1	● Clamp	35	0423-153		2	● O-Ring
3	0402-985		1	● Boot, Propeller Shaft	36	0423-149		1	O-Ring
4	0423-393		1	● Clamp	37	0402-393		1	Bearing
5	1402-045		1	● Shaft, Output	38	0402-405		AR	Shim, 41 x 49 x 1.3 mm
6	1502-085		1	● Shaft, Input		0402-406		AR	Shim, 41 x 49 x 1.4 mm
7	1402-011		1	Seal		0402-407		AR	Shim, 41 x 49 x 1.5 mm
8	0423-423		1	Ring, Retaining		0402-408		AR	Shim, 41 x 49 x 1.6 mm
9	1502-237		1	Bracket, Actuator		0402-409		AR	Shim, 41 x 49 x 1.7 mm
10	1502-909	X	1	Actuator (inc. 11)	39	1502-860	X	1	Gear, Ring - 36T
11	1402-981		1	● O-Ring	40	1402-074		AR	Shim, 61 x 69 x 1.3 mm
12	0423-892		1	O-Ring		1402-075		AR	Shim, 61 x 69 x 1.4 mm
13	0423-396		3	Screw, Self-Tapping		1402-076		AR	Shim, 61 x 69 x 1.5 mm
14	1402-043		1	Bearing		1402-077		AR	Shim, 61 x 69 x 1.6 mm
15	0423-118		11	Screw, Self-Tapping		1402-078		AR	Shim, 61 x 69 x 1.7 mm
16	0502-528		1	Housing, Pinion	41	1502-895	X	1	Cover, Gearcase (inc. one No. 35, 42-52, and one No. 53)
17	0402-947		1	Gasket, Flange					
18	0423-417		1	Ring, Retaining	42	1402-053		1	● Bearing
19	0402-997		1	Shaft, Selector	43	0502-413		1	● Flange, Bearing
20	0423-402		1	Ring, Retaining	44	1402-079		1	● Pin, Parallel
21	0402-998		1	Fork, Selector	45	1402-042		1	● Collar, Sliding
22	0402-417		1	Shaft, Shuttle	46	1402-054		1	● Fork
23	0423-147		1	O-Ring	47	1402-058		2	● Ring, Retaining
24	0402-999		1	Spring, Return	48	1402-057		1	● Spring
25	0402-413		1	Coupler, Drive	49	1402-063		1	● Spring
26	1423-067	X	1	Ring, Retaining	50	1402-656		1	● Shaft, Lock
27	1502-863	X	1	Gear, Pinion - Assembly - 10T (inc. 28-29)	51	1402-211		1	● Plug, Oil Level (inc. one No. 35)
					52	1402-056		1	● Seal
28	1402-977	X	1	● Collar, Retaining	53	1402-950	X	2	● Seal
29	0402-327		1	● Bearing	54	0402-333		1	Plug, Fill (inc. 55)
30	1502-856	X	1	Housing, Gearcase	55	0423-154		1	● O-Ring
31	1402-980	X	1	Fitting, Elbow					

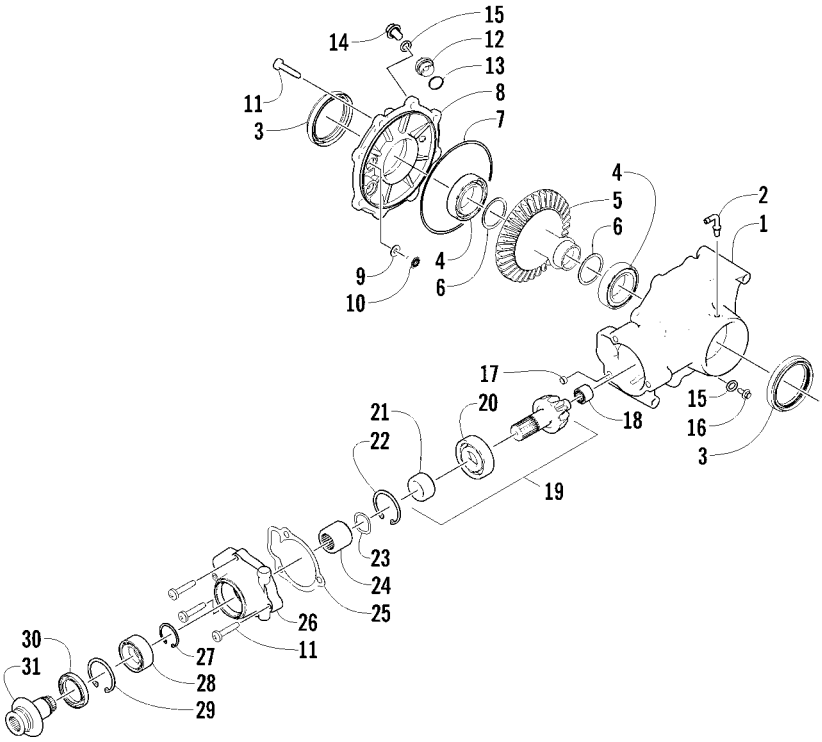

REAR DRIVE GEARCASE ASSEMBLY

0745-864

Ref	Part No.	New	Qty	Description	Ref	Part No.	New	Qty	Description
-	1502-879	X	1	Complete Rear Drive Gearcase Assembly	12	0402-333		1	Plug, Magnetic (inc. 13)
					13	0423-154		1	● O-Ring
1	1502-896	X	1	Housing, Gearcase	14	1402-211		1	Plug, Oil Level (inc. one No. 15)
2	1402-442		1	Fitting, Elbow	15	0423-153		2	● O-Ring
3	1402-950	X	2	Seal	16	1402-210		1	Plug, Fill (inc. one No. 15)
4	0402-393		2	Bearing	17	0402-411		1	Pin, Dowel
5	1402-032		1	Gear, Ring - 36T	18	0402-328		1	Bearing
6	0402-405		AR	Shim, 41 x 49 x 1.3 mm	19	1502-863	X	1	Gear, Pinion - Assembly - 10T (inc. 20-21)
	0402-406		AR	Shim, 41 x 49 x 1.4 mm					
	0402-407		AR	Shim, 41 x 49 x 1.5 mm	20	0402-327		1	● Bearing
	0402-408		AR	Shim, 41 x 49 x 1.6 mm	21	1402-977	X	1	● Collar, Retaining
	0402-409		AR	Shim, 41 x 49 x 1.7 mm	22	1423-067	X	1	Ring, Retaining
7	0423-149		1	O-Ring	23	0402-982		1	Washer, Wave
8	1502-897	X	1	Cover, Gearcase	24	0402-981		1	Collar, Shaft
9	0402-429		AR	Shim, 6.3 x 18 x 1.3 mm	25	0402-947		1	Gasket, Flange
	0402-430		AR	Shim, 6.3 x 18 x 1.4 mm	26	0502-529		1	Housing, Pinion
	0402-431		AR	Shim, 6.3 x 18 x 1.5 mm	27	0423-417		1	Ring, Retaining
	0402-432		AR	Shim, 6.3 x 18 x 1.6 mm	28	1402-043		1	Bearing
	0402-433		AR	Shim, 6.3 x 18 x 1.7 mm	29	0423-423		1	Ring, Retaining
10	0402-326		1	Button, Thrust	30	1402-011		1	Seal
11	0423-118		11	Screw, Self-Tapping	31	1502-085		1	Shaft, Input

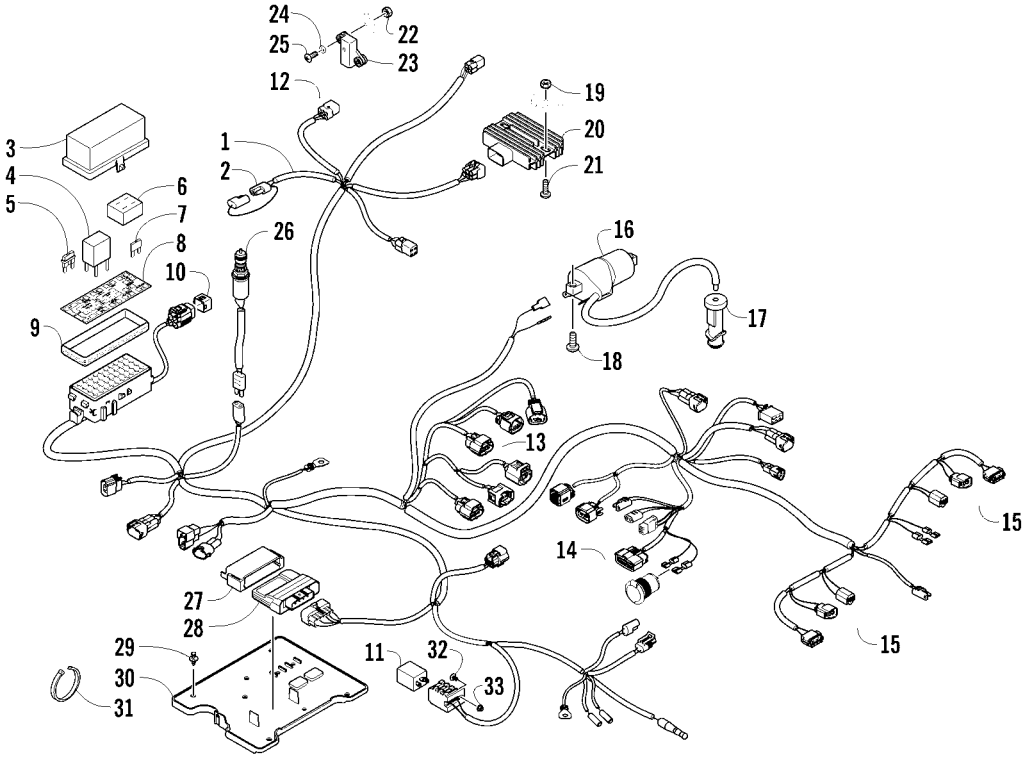

WIRING HARNESS ASSEMBLY

0745-394

Ref	Part No.	New	Qty	Description	Ref	Part No.	New	Qty	Description
1	0486-371		1	Harness, Main (inc. 2-10)	16	0824-043		1	Coil, Ignition
2	0486-164		1	● Tether, Accessory Connector	17	0824-049		1	Cap, Spark Plug
3	0430-085		1	● Cover, Fuse Block	18	8476-620		2	Screw, Machine
4	0430-045		6	● Relay (4-Pin) - 20 Amp	19	0623-038		2	Nut w/Washer
5	0430-034		2	● Diode	20	0824-037		1	Regulator, Voltage
6	0430-037		1	● Holder, Fuse	21	8476-625		2	Screw, Machine
7	0430-032		5	● Fuse - 10 Amp	22	0423-493		2	Nut w/Washer
	0430-031		4	● Fuse - 15 Amp	23	0409-064		1	Sensor, Tilt
	0430-030		3	● Fuse - 30 Amp	24	0123-802		2	Washer
8	2411-213		1	● Decal, Fuse Block	25	8468-425		2	Screw, Machine
9	0430-086		1	● Seal	26	0409-089		1	Switch, Brake - Assembly
10	0430-097		1	● Cover, Diagnostics Connector	27	0430-076		1	Cushion, ECU
11	0430-049		1	Flasher	28	0530-041		1	ECU
12	1436-416		1	Repair Kit, Connector - Tilt Sensor	29	0623-362		3	Rivet, Reinstallable
13	1436-417		1	Repair Kit, Connector - Idle Speed Control	30	2406-643		1	Tray, Electrical
					31	0123-788		AR	Tie, Cable - 8 in.
14	1436-415		1	Repair Kit, Connector - LCD Gauge		0123-903		AR	Tie, Cable - 11.5 in.
15	1436-424		AR	Repair Kit, Connector - Headlight/Turn Signal/Position	32	8476-516		1	Screw, Machine
					33	8427-502		1	Nut, Lock

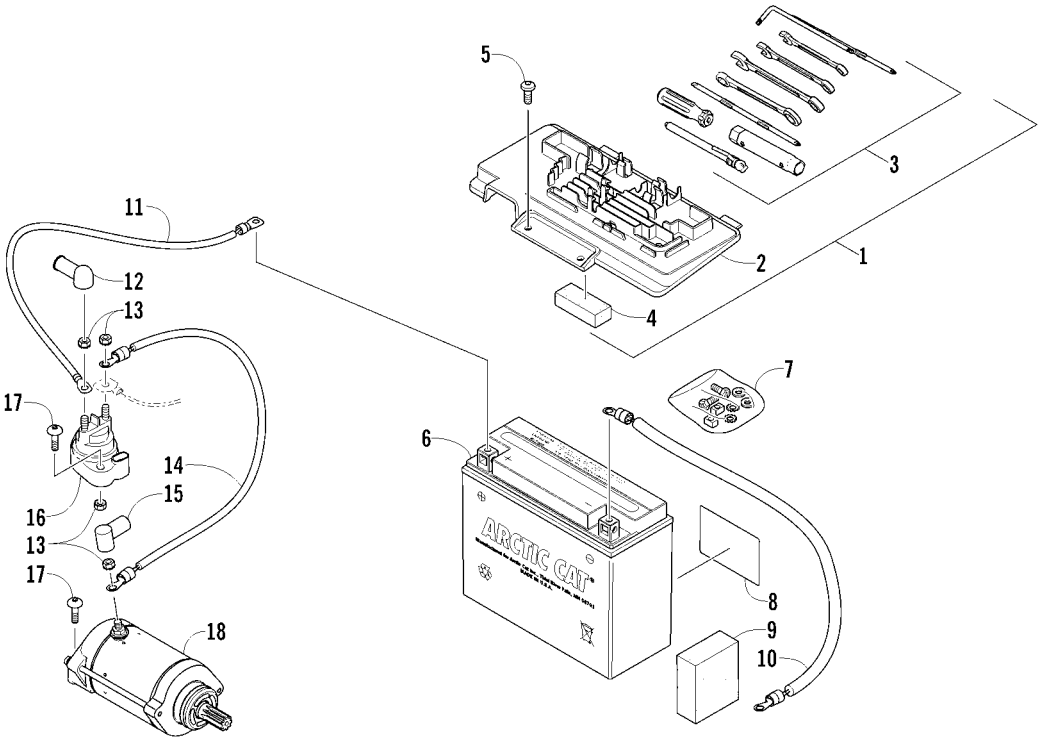

BATTERY AND STARTER ASSEMBLY

0745-257

Ref	Part No.	New	Qty	Description	Ref	Part No.	New	Qty	Description
1	5991-655		1	Battery Cover/Tool Tray Assembly (inc. 2-4)	10	0445-070		1	Cable, Battery/Ground
					11	0445-062		1	Cable, Battery/Solenoid
2	2406-815		1	● Cover, Battery	12	0645-327		1	Boot, Terminal
3	0444-122		1	● Kit, Tool	13	0623-038		5	Nut w/Washer
4	0417-016		1	● Pad, Battery	14	0445-064		1	Cable, Solenoid/Starter (inc. 15)
5	8476-620		2	Screw, Machine	15	0645-019		1	● Boot, Terminal
6	0645-480		1	Battery Assembly (inc. 7-8)	16	0445-058		1	Solenoid
7	0445-082		1	● Kit, Hardware	17	8476-625		4	Screw, Machine
8	0645-430		1	● Decal, Warning	18	0825-013		1	Motor, Starter - Assembly
9	0417-017		1	Foam, Battery					

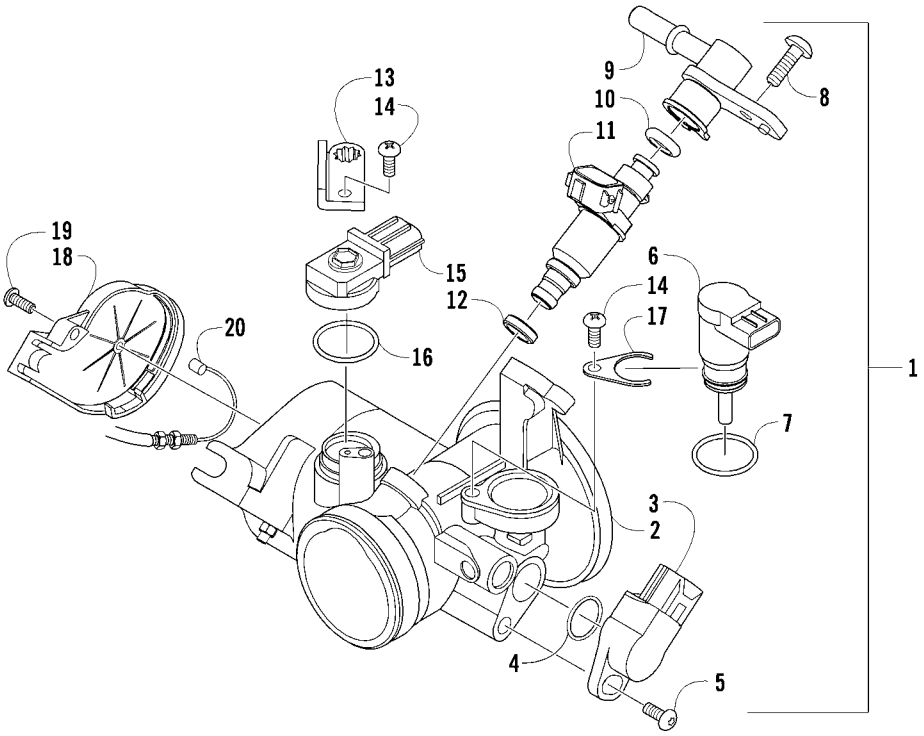

THROTTLE BODY ASSEMBLY

0742-670

Ref	Part No.	New	Qty	Description	Ref	Part No.	New	Qty	Description
1	0470-753		1	Throttle - Assembly (inc. 2-19)	11	0470-762		1	● Injector, Fuel
2	–		1	● Throttle Body - Not a Service Part	12	0470-768		1	● Seal
3	0430-072		1	● Sensor, Throttle Position	13	5507-227		1	● Bracket, MAP Sensor
4	5507-234		1	● O-Ring	14	5507-117		2	● Screw, Machine
5	5507-231		1	● Screw, Machine	15	0430-073		1	● Sensor, MAP
6	0430-074		1	● Valve, ISC	16	5507-232		1	● O-Ring
7	5507-233		1	● O-Ring	17	5507-229		1	● Plate, ISC Valve
8	5507-238		1	● Screw, Machine	18	5507-223		1	● Cover
9	0470-687		1	● Rail, Fuel	19	5507-037		1	● Screw, Machine
10	0470-767		1	● O-Ring	20	0487-057		1	Cable, Throttle

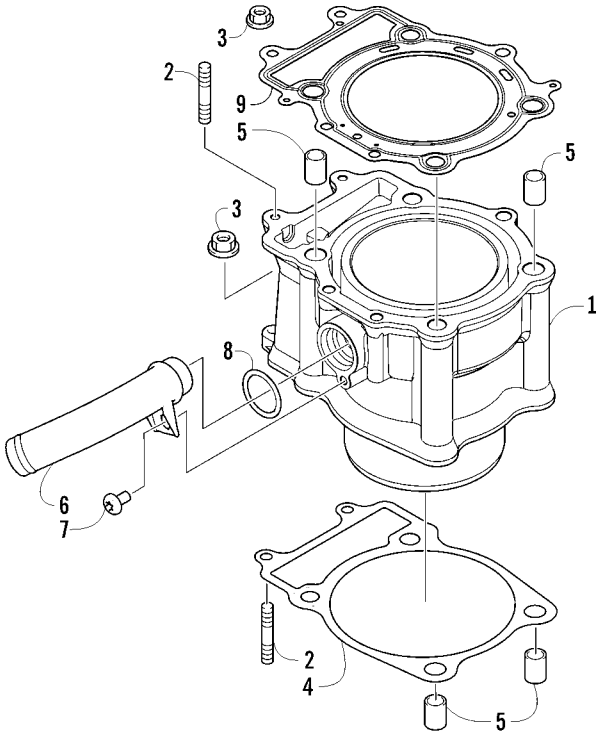

CYLINDER ASSEMBLY

0744-071

Ref	Part No.	New	Qty	Description	Ref	Part No.	New	Qty	Description
1	0804-051		1	Cylinder	6	0804-047		1	Union, Coolant Hose
2	0827-002		4	Bolt, Stud	7	8468-612		1	Screw, Machine
3	8424-604		4	Nut	8	0830-007		1	O-Ring
4	0830-084		1	Gasket, Base	9	0830-097		1	Gasket, Cylinder Head
5	0829-002		4	Pin, Dowel					

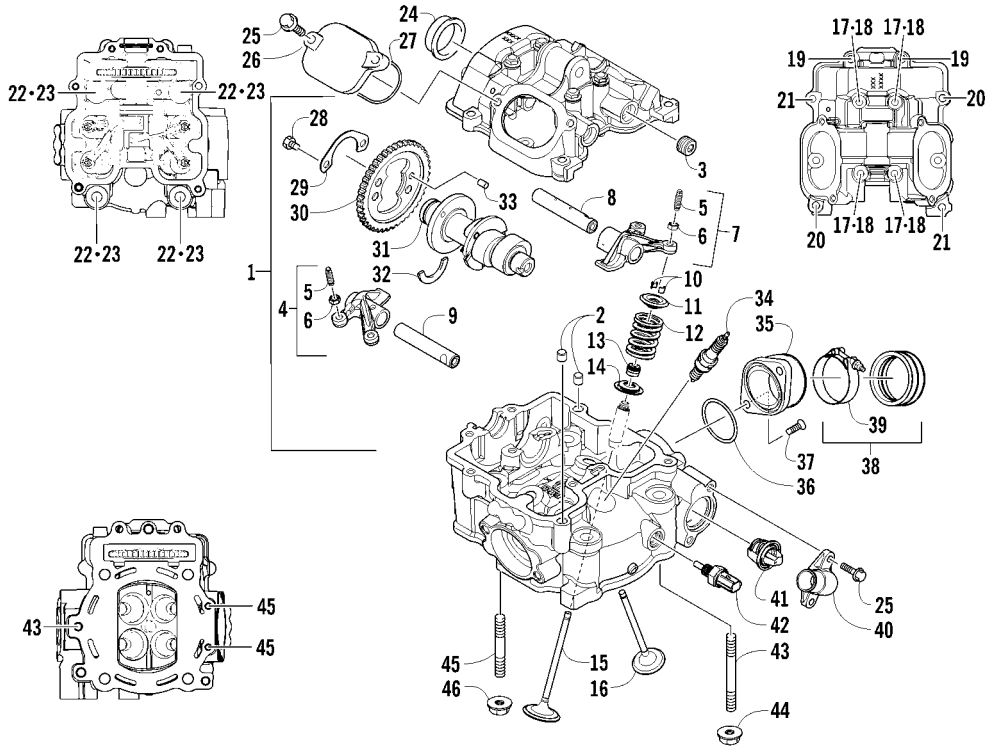

CYLINDER HEAD AND CAMSHAFT/VALVE ASSEMBLY

0745-901

Ref	Part No.	New	Qty	Description	Ref	Part No.	New	Qty	Description
1	0808-175		1	Head, Cylinder - Assembly (inc. 2-17)	23	0830-147		4	Washer
2	0829-048		2	● Pin, Dowel	24	0808-077		1	Plug, Cylinder Head
3	0831-092	X	2	● Plug, Shaft	25	0826-007		6	Screw, Cap
4	0809-237		1	● Arm, Valve Rocker - Exhaust (inc. two No. 5-6)	26	0808-003		2	Cap, Inspection
					27	0830-167		2	O-Ring
5	0809-240		4	●● Screw, Adjuster	28	0826-034		2	Screw, Cap
6	0827-059		4	●● Nut	29	0828-004		1	Plate, Retainer
7	0809-234		1	● Arm, Valve Rocker - Intake (inc. two No. 5-6)	30	0809-212	X	1	Sprocket
					31	0809-245		1	Camshaft
8	0809-241		1	● Shaft, Rocker Arm - Intake	32	0809-003		1	C-Ring
9	0809-242		1	● Shaft, Rocker Arm - Exhaust	33	0829-049		1	Pin, Dowel
10	0809-233		8	● Cotter, Valve	34	0217-799		1	Spark Plug - CPR8E
11	0809-232		4	● Retainer, Spring	35	0470-668		1	Flange, Intake Manifold
12	0809-231		4	● Spring, Valve	36	0830-090		1	O-Ring
13	0830-186		4	● Seal, Oil	37	0826-008		2	Screw, Machine
14	0809-230		4	● Seat, Spring - Valve	38	0437-069		1	Boot (inc. 39)
15	0809-228		2	● Valve, Intake	39	1423-041		1	● Clamp
16	0809-229		2	● Valve, Exhaust	40	0808-008		1	Cover, Thermostat
17	0826-149		4	● Screw, Cap	41	0808-078		1	Thermostat
18	0830-155		4	Gasket	42	0808-124		1	Sensor, Engine Coolant Temperature
19	0826-002		2	Screw, Cap	43	0827-031		1	Bolt, Stud
20	0826-005		2	Screw, Cap	44	8424-804		1	Nut
21	0826-006		2	Screw, Cap	45	0827-030		2	Bolt, Stud
22	0808-037		4	Screw, Cap	46	8424-604		2	Nut

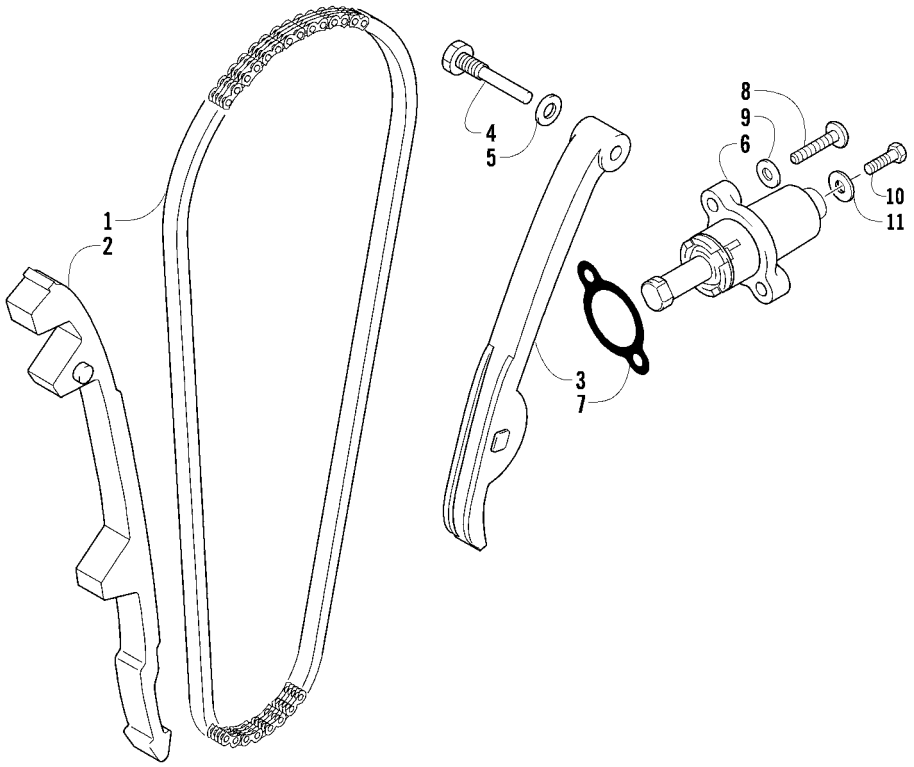

CAM CHAIN ASSEMBLY

0732-308

Ref	Part No.	New	Qty	Description	Ref	Part No.	New	Qty	Description
1	0810-001		1	Chain, Cam	7	0830-018		1	Gasket
2	0810-002		1	Guide, Chain	8	8468-625		2	Screw, Machine
3	0810-003		1	Tensioner, Chain	9	0830-107		2	Gasket
4	0826-036		1	Pivot, Tensioner	10	8400-610		1	Screw, Cap
5	0830-025		1	Washer, Crush	11	0828-129		1	Washer
6	0810-004		1	Adjuster, Tensioner - Assembly					

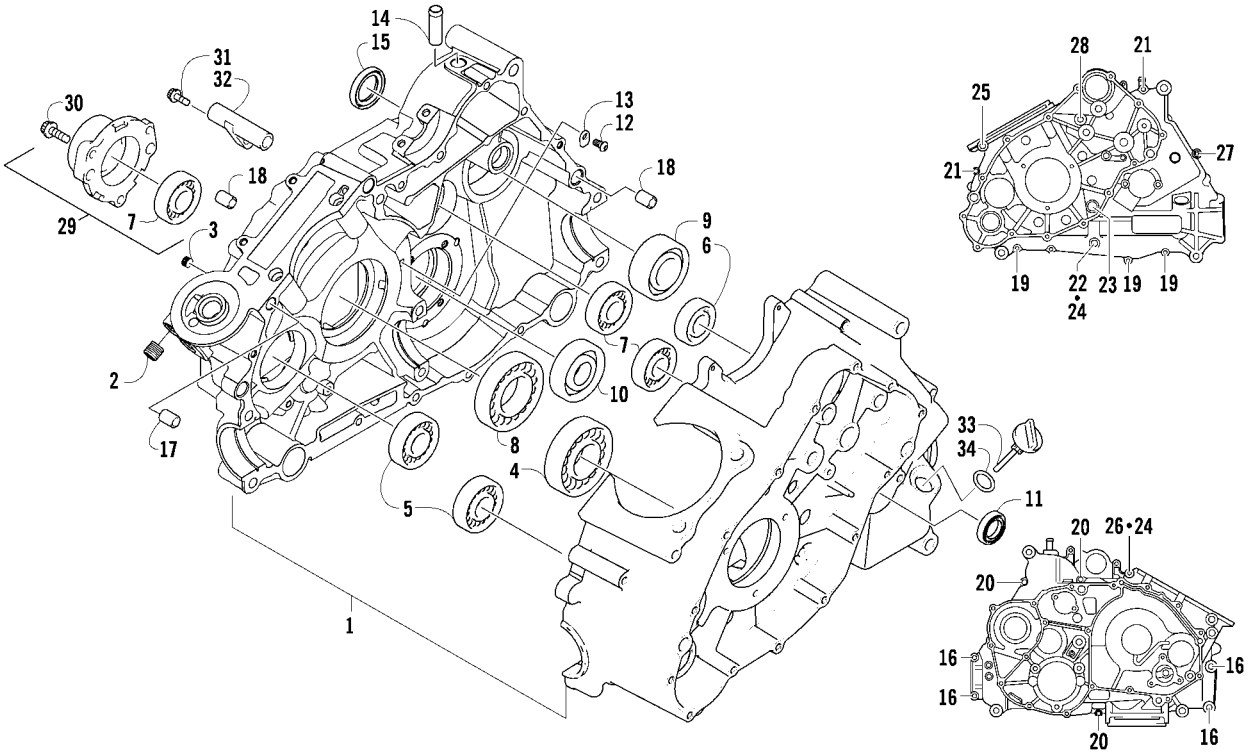

CRANKCASE ASSEMBLY

0743-953

Ref	Part No.	New	Qty	Description	Ref	Part No.	New	Qty	Description
1	0801-151		1	Crankcase Assembly (inc. 2-15)	19	8468-645		3	Screw, Machine
2	0812-064		2	● Plug	20	8468-655		3	Screw, Machine
3	0801-002		1	● Plug	21	8468-675		2	Screw, Machine
4	0832-043		1	● Bearing	22	8412-860		1	Screw, Cap
5	0832-044		2	● Bearing	23	0826-017		1	Screw, Cap
6	0832-049		1	● Bearing	24	0830-008		2	Gasket
7	0832-050		3	● Bearing	25	0826-019		1	Screw, Cap
8	0832-042		1	● Bearing	26	0826-018		1	Screw, Cap
9	0832-048		1	● Bearing	27	8468-695		1	Screw, Machine
10	0832-077		1	● Bearing	28	8468-680		1	Screw, Machine
11	0822-052		1	● Seal, Countershaft	29	0801-029		1	Housing, Secondary Shaft (inc. one No. 7)
12	0826-100		4	● Screw, Machine					
13	0822-010		4	● Retainer, Bearing	30	0826-105		3	Screw, Cap
14	0801-028		1	● Pipe, Breather	31	0826-038		1	Screw, Cap
15	0830-035		1	● Seal, Driveshaft	32	0801-069		1	Pipe, Breather
16	8412-850		4	Screw, Cap	33	0801-179		1	Stick, Oil Level
17	0829-003		1	Pin, Dowel	34	0830-010		1	O-Ring
18	0829-002		5	Pin, Dowel					

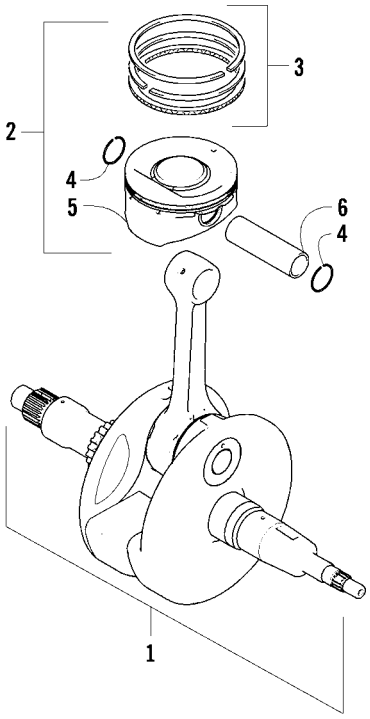

CRANKSHAFT AND PISTON ASSEMBLY

0739-932

Ref	Part No.	New	Qty	Description	Ref	Part No.	New	Qty	Description
1	0805-325	X	1	Crankshaft Assembly	4	0831-001		2	● Circlip, Piston Pin
2	0805-064		1	Piston Set (inc. 3-6)	5	–		1	● Piston - Not a Service Part
3	0805-065		1	● Ring, Piston - Set	6	0805-012		1	● Pin, Piston

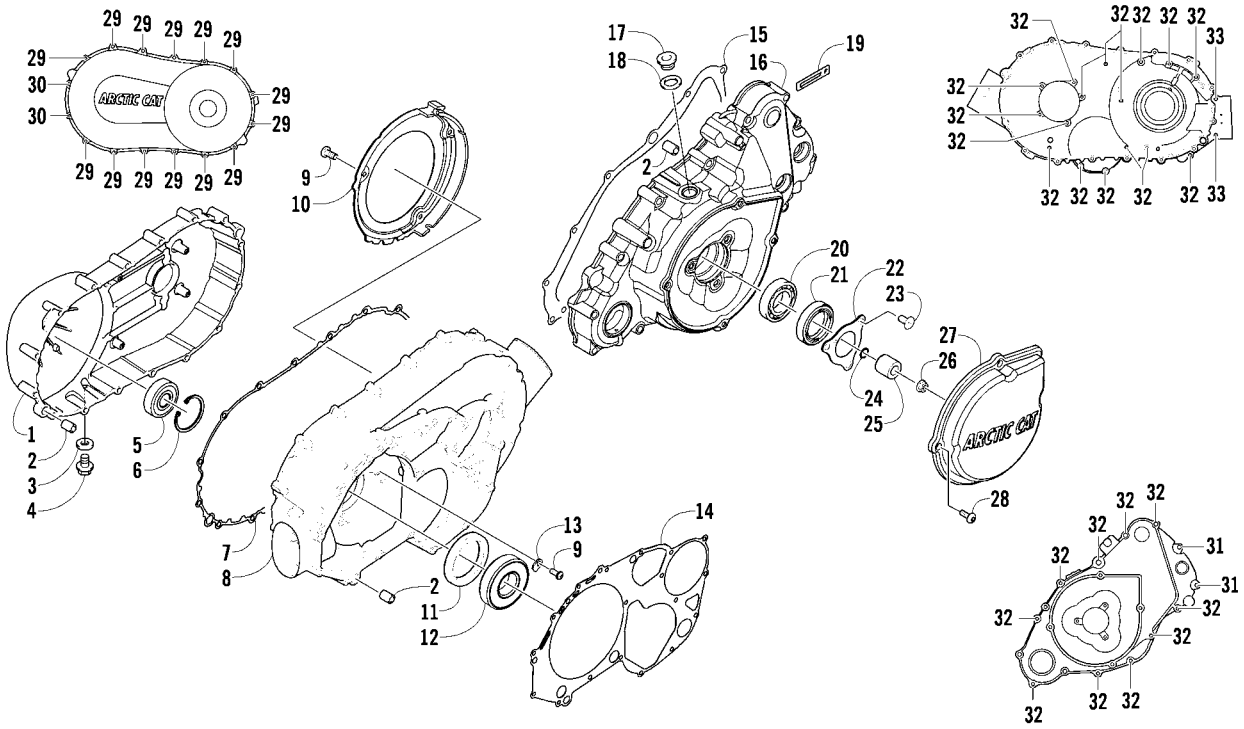

CLUTCH/V-BELT/MAGNETO COVER ASSEMBLY

0743-969

Ref	Part No.	New	Qty	Description	Ref	Part No.	New	Qty	Description
1	0806-089		1	Cover, V-Belt	18	0830-015		1	Washer, Crush
2	0829-002		6	Pin, Dowel	19	3002-964		1	Clamp, Wire
3	0830-013		1	Washer, Crush	20	1602-981		1	Bearing
4	8408-812		1	Screw, Cap	21	0830-158		1	Seal
5	0832-060		1	Bearing	22	0805-008		1	Retainer, Seal
6	0831-078		1	Ring, Retaining	23	0826-031		3	Screw, Machine
7	0830-174		1	Gasket, V-Belt Cover	24	0830-108		1	O-Ring
8	0806-086		1	Cover, Clutch	25	0820-061		1	Bushing
9	0826-029		5	Screw, Machine	26	0827-008		1	Nut
10	0806-048		1	Plate, Air Intake	27	0820-062		1	Cover, Magneto
11	0830-188		1	Seal	28	8468-616		4	Screw, Machine
12	0832-009		1	Bearing	29	8468-645		14	Screw, Machine
13	0822-010		2	Retainer, Bearing	30	8468-655		2	Screw, Machine
14	0830-116		1	Gasket, Clutch Cover	31	8468-625		2	Screw, Machine
15	0830-128		1	Gasket, Magneto Cover	32	8468-640		26	Screw, Machine
16	0806-082		1	Cover, Magneto - Assembly	33	8468-675		2	Screw, Machine
17	0826-155		1	Plug					

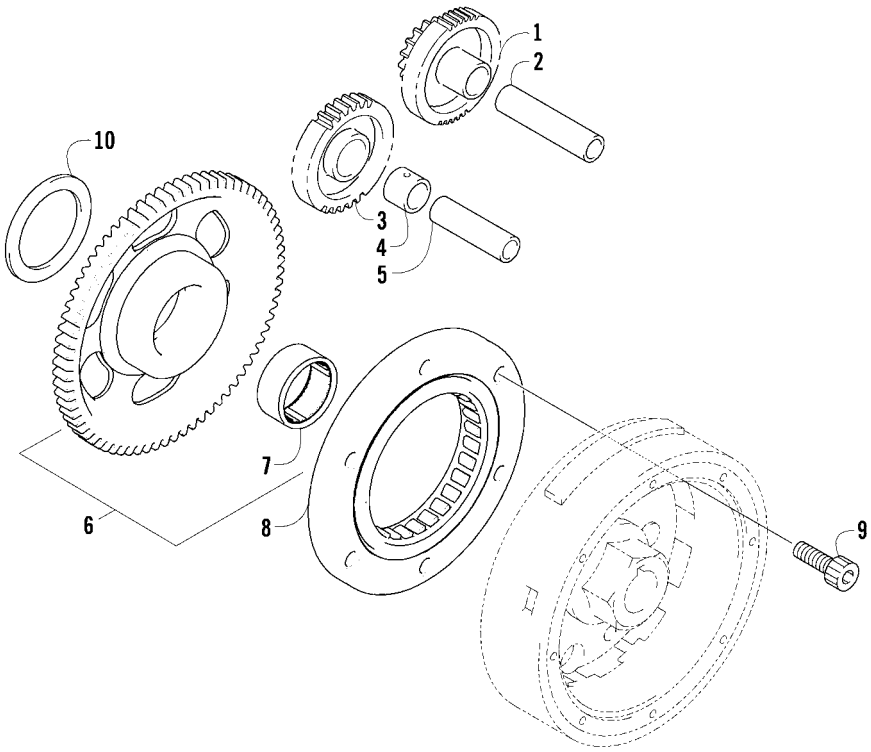

STARTER CLUTCH ASSEMBLY

0739-940

Ref	Part No.	New	Qty	Description	Ref	Part No.	New	Qty	Description
1	0815-001		1	Gear, Starter Idler - No. 1	6	0815-004		1	Gear, Starter Clutch (inc. 7)
2	0829-031		1	Shaft, Starter Gear	7	0832-079		1	● Bearing
3	0815-002		1	Gear, Starter Idler - No. 2	8	0802-035		1	Clutch, Starter
4	0815-003		1	Spacer, Starter Idler Gear No. 2	9	0826-069		6	Screw, Machine
5	0829-032		1	Shaft, Starter Gear	10	0828-094		1	Washer

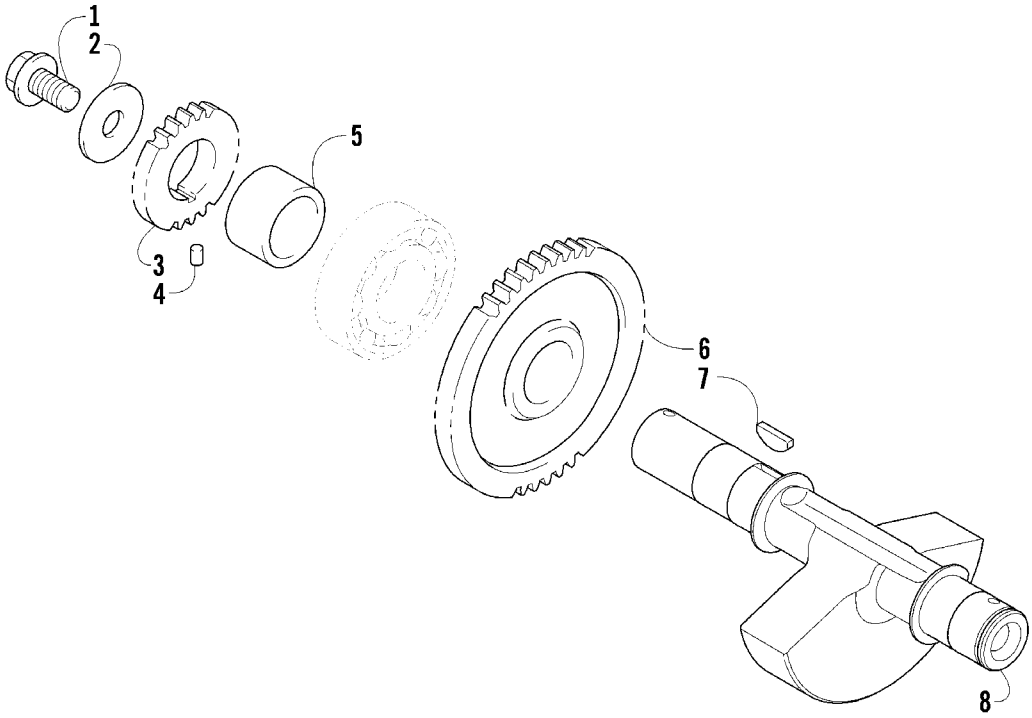

CRANK BALANCER ASSEMBLY

0739-941

Ref	Part No.	New	Qty	Description	Ref	Part No.	New	Qty	Description
1	0826-033		1	Screw, Cap	5	0811-004		1	Spacer
2	0828-003		1	Washer	6	0811-034		1	Gear, Driven
3	0811-003		1	Gear, Oil Pump Drive	7	0829-006		1	Key
4	0829-007		1	Pin, Dowel	8	0805-304	X	1	Balancer, Crank

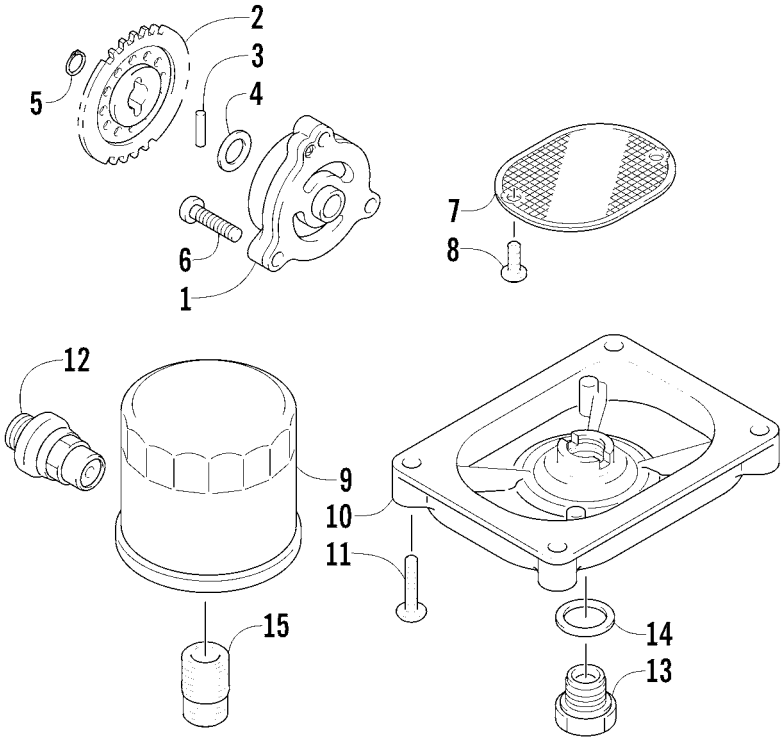

OIL FILTER/PUMP ASSEMBLY

0744-012

Ref	Part No.	New	Qty	Description	Ref	Part No.	New	Qty	Description
1	0812-023		1	Pump, Oil	9	0812-029		1	Filter, Oil
2	0812-083		1	Gear, Driven	10	0812-053		1	Cap, Oil Strainer
3	0829-009		1	Pin	11	8468-625		4	Screw, Machine
4	0828-007		1	Washer	12	0812-007		1	Valve, Oil-Relief - Assembly
5	0831-002		1	Ring, Retaining	13	0812-006		1	Plug, Drain
6	0826-039		3	Screw, Machine	14	0830-017		1	Gasket, Drain Plug
7	0812-057		1	Strainer, Oil	15	0812-008		1	Union, Oil Filter
8	0826-040		2	Screw, Machine					

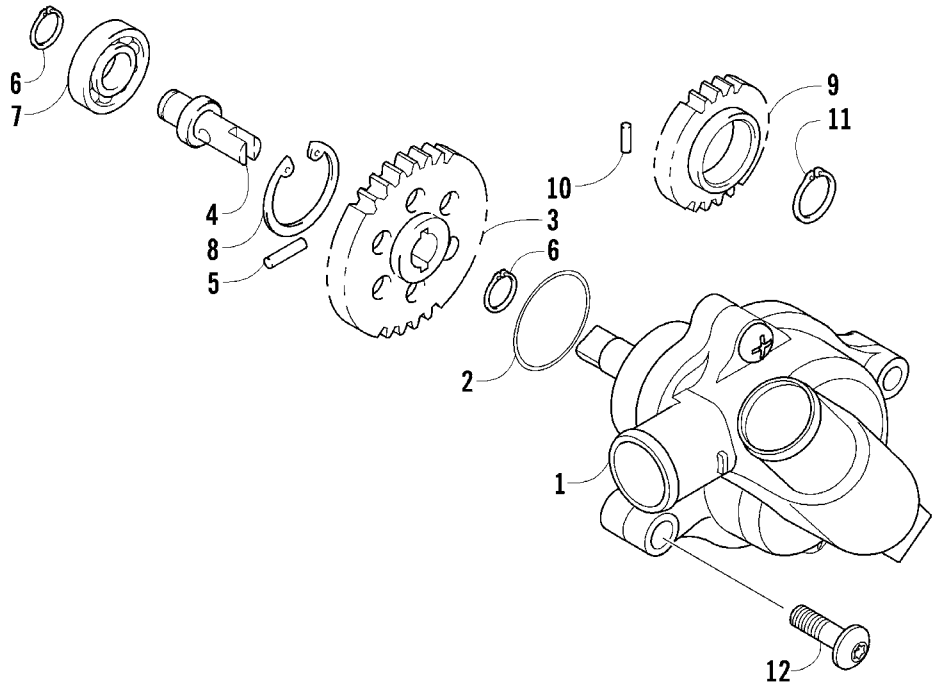

WATER PUMP ASSEMBLY

0739-945

Ref	Part No.	New	Qty	Description	Ref	Part No.	New	Qty	Description
1	0813-001		1	Pump, Water - Assembly (inc. 2)	7	0832-046		1	Bearing, Shaft
2	0830-029		1	● O-Ring	8	0831-004		1	Ring, Retaining
3	0813-004		1	Gear, Driven	9	0811-003		1	Gear, Water Pump Drive
4	0813-005		1	Shaft, Driven Gear	10	0829-007		1	Pin, Alignment
5	0829-009		1	Pin, Driven Gear	11	0831-005		1	Ring, Retaining
6	0831-002		2	Ring, Retaining	12	8468-665		2	Screw, Machine

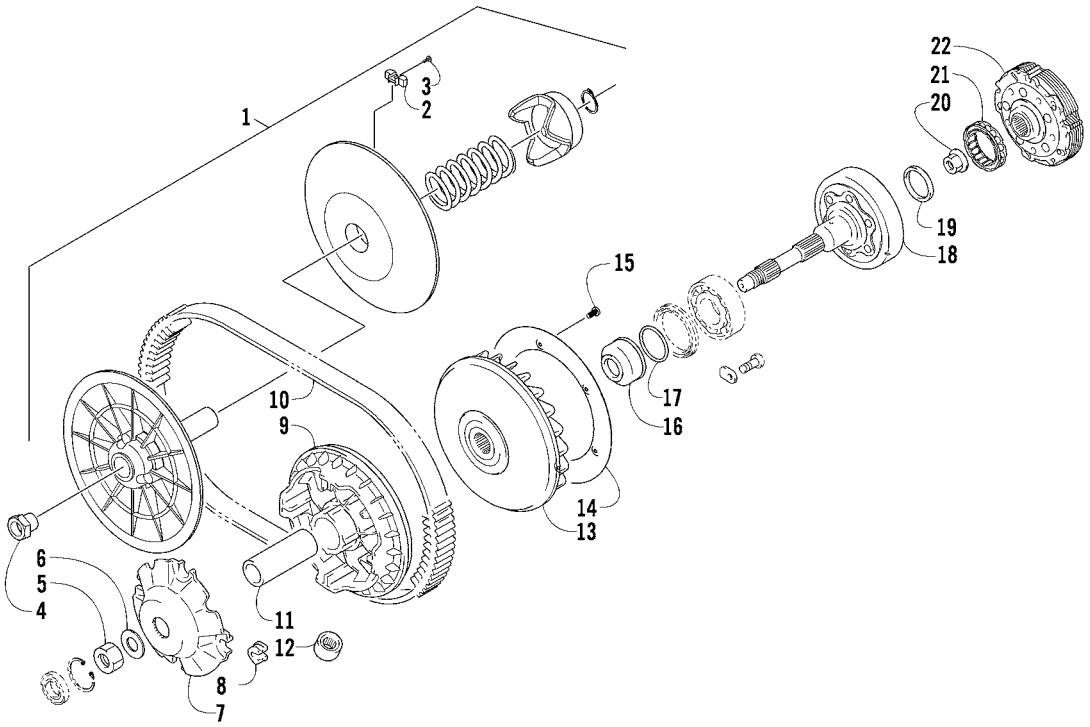

TRANSMISSION ASSEMBLY

0743-967

Ref	Part No.	New	Qty	Description	Ref	Part No.	New	Qty	Description
1	0823-353	X	1	Pulley, Driven - Assembly (inc. 2-4)	12	0823-167		8	Roller
2	0823-176		3	● Shoe, Cam	13	0823-272	X	1	Face, Fixed Drive
3	0823-177		3	● Screw, Machine	14	0823-131		1	Shroud, Drive Face
4	0823-178		1	● Nut	15	0623-914		6	Screw, Self-Tapping
5	0827-010		1	Nut	16	0823-015		1	Spacer, Fixed Drive Face
6	0828-106		1	Washer	17	0470-531		1	O-Ring
7	0823-276	X	1	Plate, Movable Drive Face	18	0821-002		1	Housing, Clutch - Assembly
8	0823-277	X	4	Damper, Movable Drive Face	19	0830-189		1	Seal
9	0823-273	X	1	Face, Movable Drive	20	0827-011		1	Nut
10	0823-013		1	Belt, Drive	21	0823-018		1	Clutch, One-Way
11	0823-271	X	1	Spacer	22	0823-310		1	Clutch, Centrifugal - 6 Plate

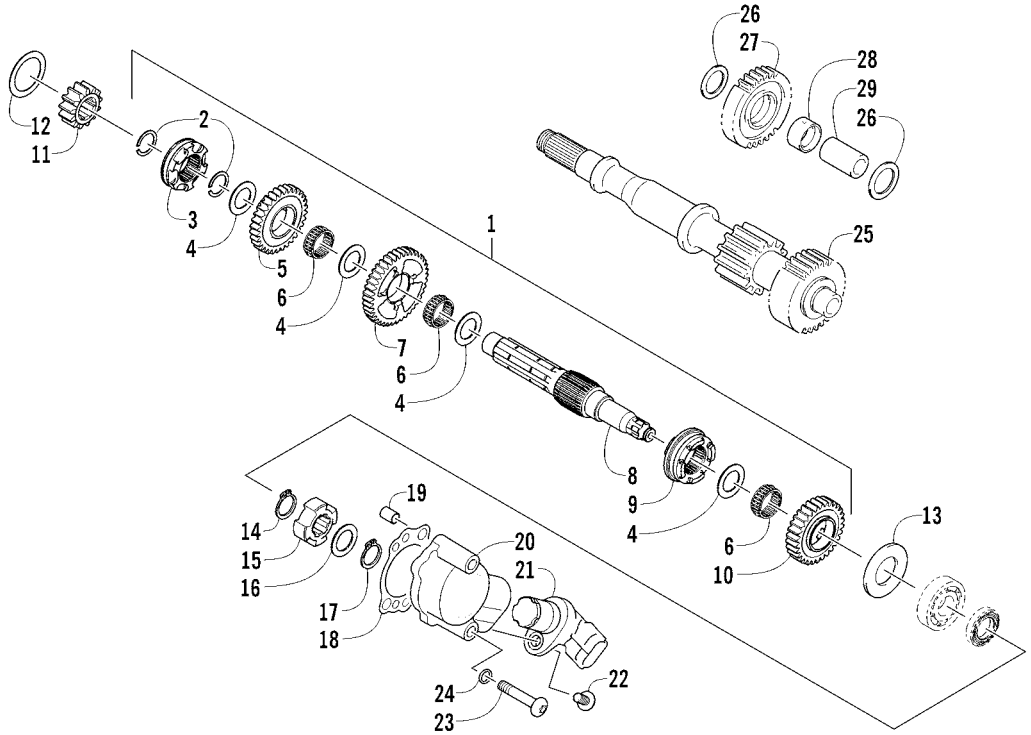

SECONDARY TRANSMISSION ASSEMBLY

0745-260

Ref	Part No.	New	Qty	Description	Ref	Part No.	New	Qty	Description
1	0822-124		1	Countershaft Assembly (inc. 2-10)	16	0828-069		1	Washer, Thrust
2	0831-085		2	● Ring, Retaining	17	0831-039		1	Ring, Retaining
3	0822-120		1	● Gear Select, Reverse	18	0830-129		1	Gasket
4	0822-121		4	● Shim	19	0829-023		2	Pin, Dowel
5	0822-119		1	● Gear, Reverse Driven	20	0822-049		1	Housing, Speedometer Sensor
6	0832-082		3	● Bearing	21	0824-042		1	Sensor, Speedometer
7	0822-114		1	● Gear, Driven - Low	22	8468-620		1	Screw, Machine
8	0822-113		1	● Countershaft	23	8468-645		2	Screw, Machine
9	0822-116		1	● Gear Select, Sliding	24	0830-107		2	Gasket
10	0822-115		1	● Gear, Driven - High	25	0822-001		1	Driveshaft
11	0822-125		1	Gear, Drive	26	0828-016		2	Washer, Thrust
12	0828-019		1	Washer, Thrust	27	0822-011		1	Gear, Reverse Idle
13	0828-011		1	Washer	28	0822-012		1	Bushing
14	0831-040		1	Ring, Retaining	29	0822-015		1	Shaft, Reverse Idle
15	0822-050		1	Trigger, Speedometer Sensor					

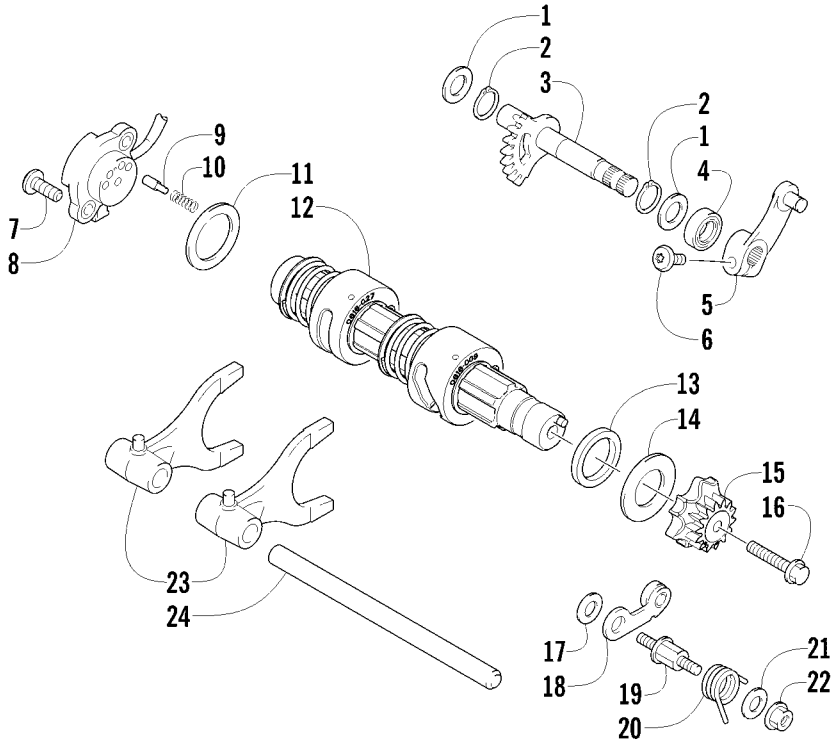

GEAR SHIFTING ASSEMBLY

0745-773

Ref	Part No.	New	Qty	Description	Ref	Part No.	New	Qty	Description
1	0828-036		2	Washer	13	0828-131	X	1	Spacer
2	0831-010		2	Ring, Retaining	14	0828-037		1	Washer
3	0818-007		1	Shaft, Sub-Gear Shift	15	0818-089		1	Plate, Gear Shift Cam
4	0830-044		1	Seal, Sub-Gear Shift Shaft	16	0826-006		1	Screw, Cap
5	0818-014		1	Arm, Select	17	0828-038		1	Washer
6	8468-620		1	Screw, Machine	18	0818-002		1	Stopper, Cam
7	8470-520		2	Screw, Machine	19	0818-004		1	Support, Cam Stopper
8	0409-090		1	Switch, Gear Position	20	0818-090		1	Spring
9	0818-013		2	Contact	21	0828-035		1	Washer
10	0818-017		2	Spring	22	8424-602		1	Nut
11	0828-040		1	Washer	23	0818-072		2	Fork, Shift
12	0818-046		1	Shaft, Gear Shift - Assembly	24	0818-006		1	Shaft, Shift Fork

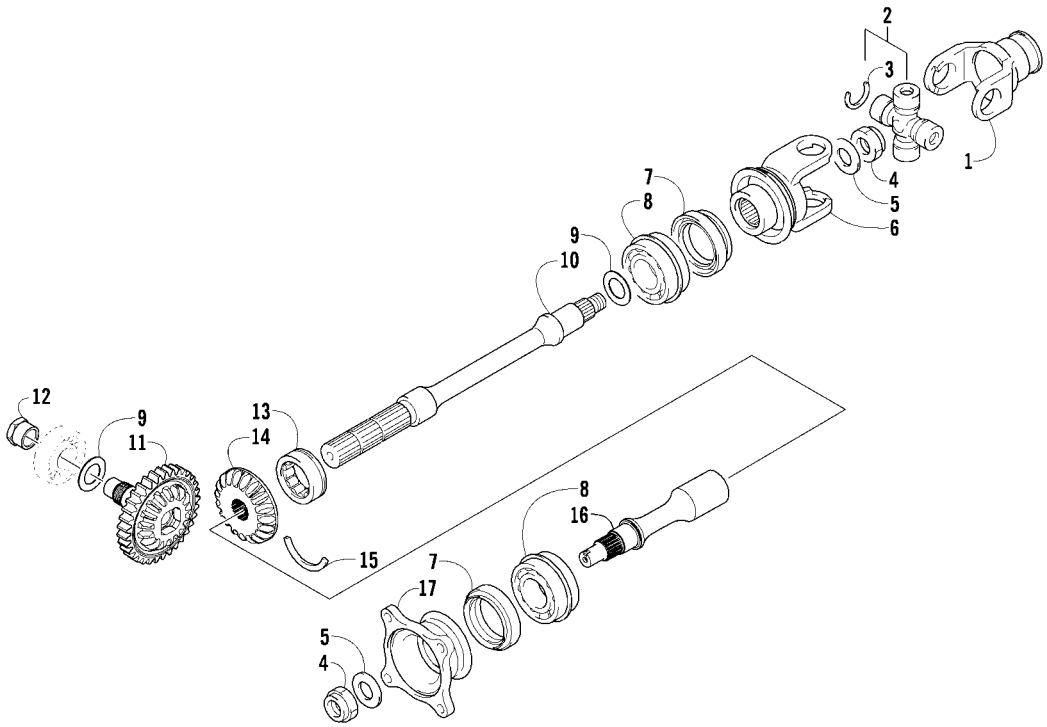

SECONDARY DRIVE ASSEMBLY

0743-766

Ref	Part No.	New	Qty	Description	Ref	Part No.	New	Qty	Description
1	0819-063		1	Yoke, Propeller Shaft Joint	10	0819-089		1	Shaft, Secondary Driven - Front
2	1402-164		1	Joint, Universal - Set (inc. 3)	11	0822-131		1	Gear, Secondary Drive
3	0423-450		4	● Ring, Retaining	12	0827-052		1	Nut
4	0827-013		2	Nut	13	0832-016		1	Bearing
5	0828-020		2	Washer	14	0822-106		1	Gear, Secondary Driven
6	0819-061		1	Yoke, Drive Output	15	0819-011		1	Ring, Driven Bearing
7	0830-043		2	Seal, Oil	16	0819-053		1	Shaft, Secondary Driven - Rear
8	0832-017		2	Bearing	17	0819-005		1	Flange, Output Joint
9	0828-021		AR	Shim, 25 x 34 x 0.25 mm					
	0828-022		AR	Shim, 25 x 34 x 0.30 mm					
	0828-023		AR	Shim, 25 x 34 x 0.70 mm					
	0828-024		AR	Shim, 25 x 34 x 0.90 mm					
	0828-025		AR	Shim, 25 x 34 x 0.95 mm					
	0828-026		AR	Shim, 25 x 34 x 1.00 mm					
	0828-027		AR	Shim, 25 x 34 x 1.05 mm					
	0828-028		AR	Shim, 25 x 34 x 1.10 mm					
	0828-029		AR	Shim, 25 x 34 x 1.15 mm					

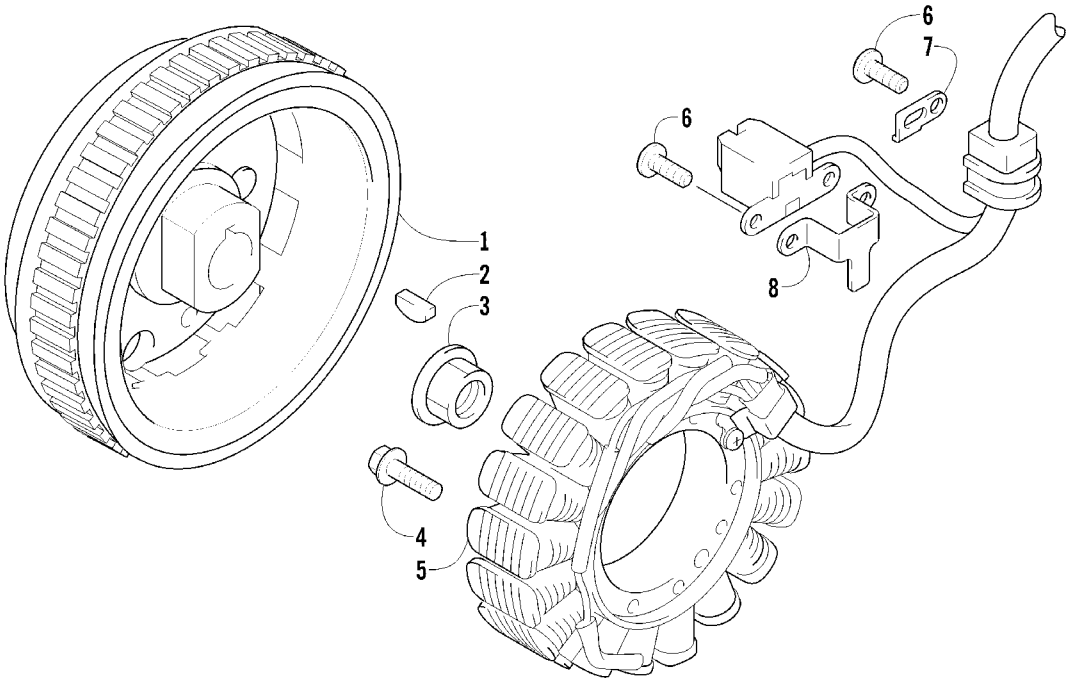

MAGNETO ASSEMBLY

0746-022

Ref	Part No.	New	Qty	Description	Ref	Part No.	New	Qty	Description
1	0802-048		1	Rotor/Flywheel	5	0802-041		1	Stator - Assembly
2	0829-012		1	Key	6	8470-510		3	Screw, Machine
3	0827-014		1	Nut	7	0802-015		1	Clamp - No. 1
4	8409-632		3	Screw, Cap	8	0802-016		1	Clamp - No. 2

Printed in U.S.A. p/n 2259-168